37LYK267

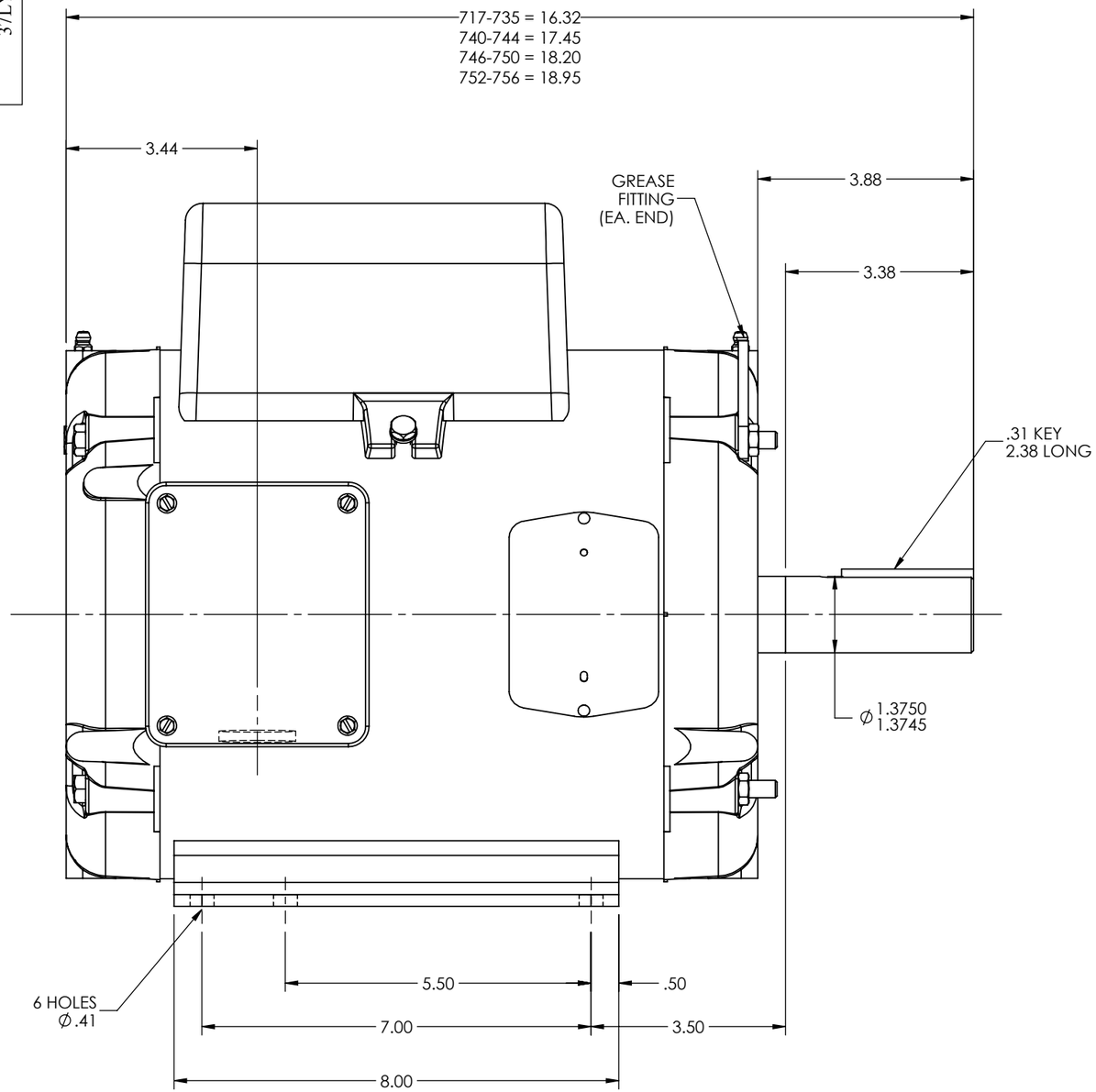

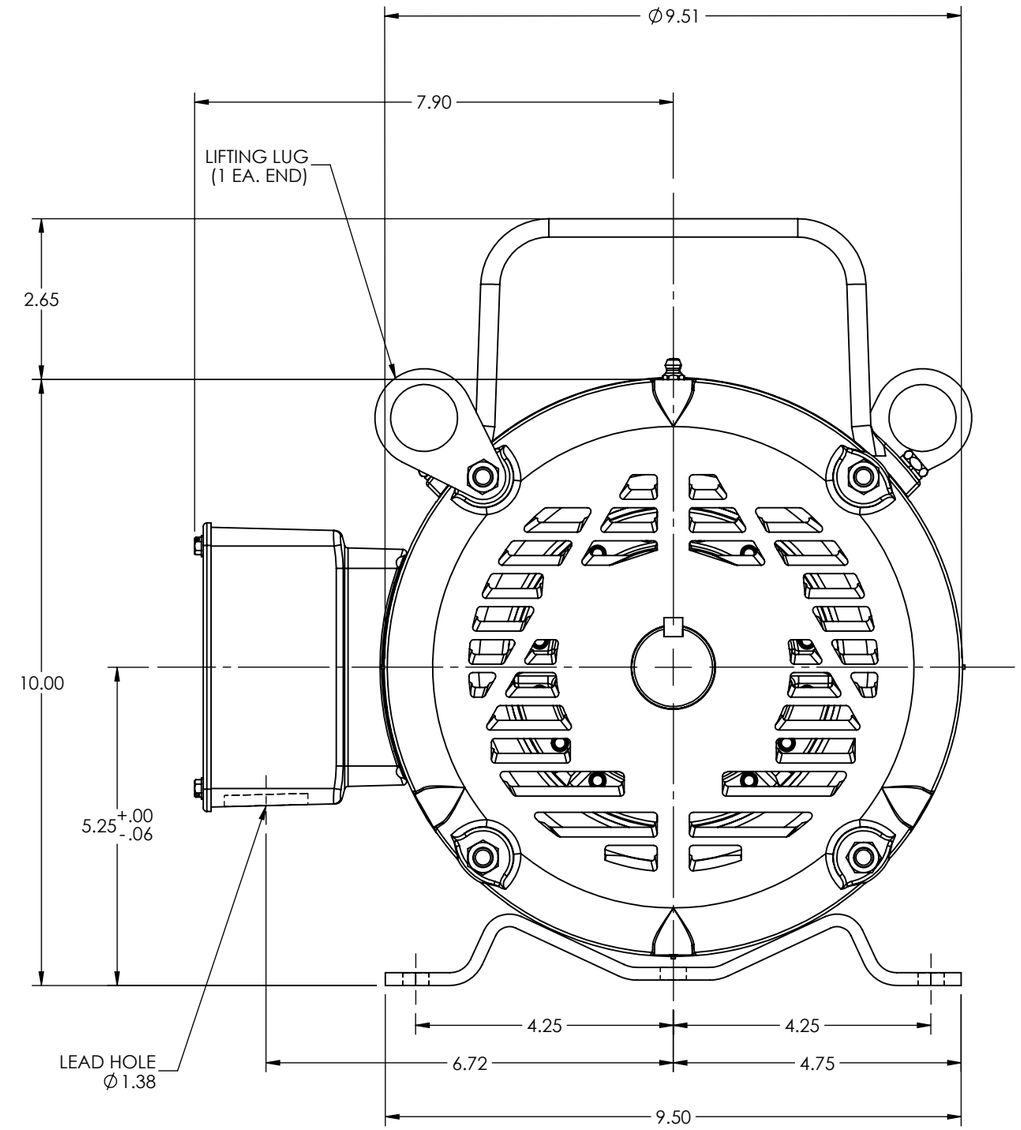

CUSTOMER IS RESPONSIBLE FOR DETERMINING THAT BALDOR'S PRODUCT WILL PERFORM SUITABLY IN THE INTENDED APPLICATION

REV. DESC: LOAD DRAWING TO SOLIDWORKS			
REV: B	VERSION: 02	REVISED: 01:41:23 03/24/2022	TDR: 000001187810
MODEL NO. 37LYK267			REF: -
BY: ENALEM0			B

BALDOR

STANDARD HORZ NEMA 213T-215T OPEN 37L-LC, TORX SWITCH

37LYK267