36LYD001

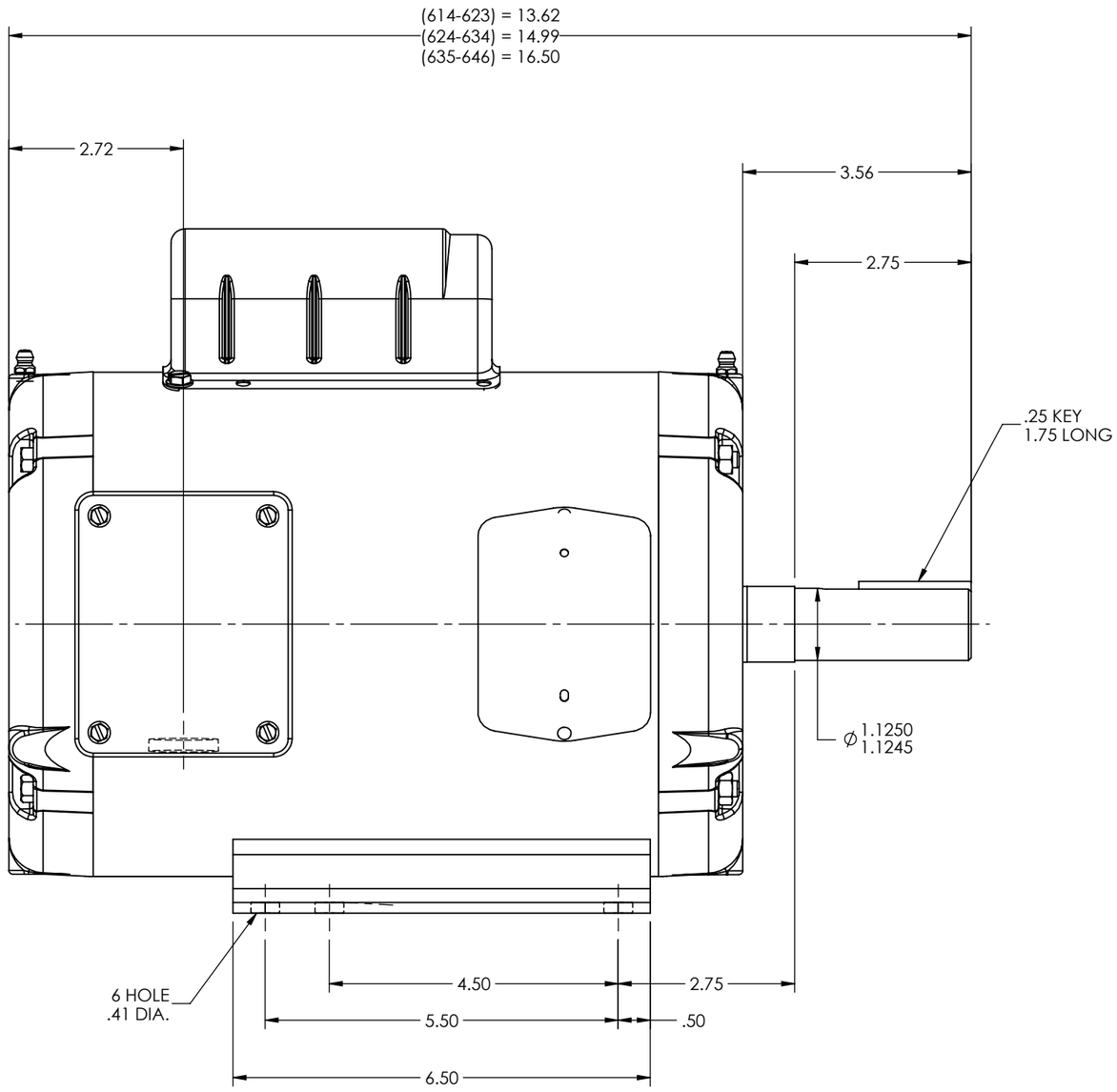

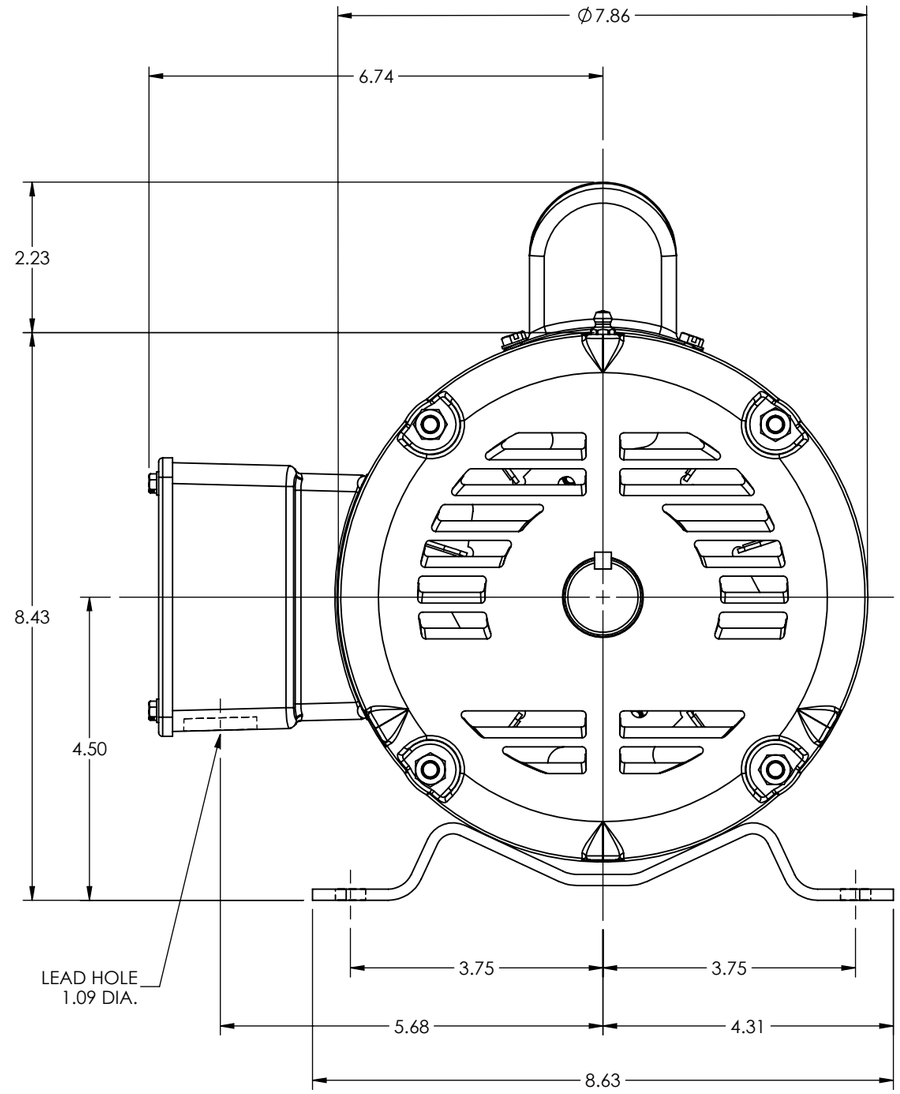

CUSTOMER IS RESPONSIBLE FOR DETERMINING THAT BALDOR'S PRODUCT WILL PERFORM SUITABLY IN THE INTENDED APPLICATION

REV. DESC: LOAD DRAWING TO SOLIDWORKS			
REV: N	VERSION: 03	REVISED: 12:00:21 05/09/2022	TDR: 000001190082
MODEL NO. 36LYD001			REF: -
BY: ENALEM0			B

BALDOR

STD HORZ 182-4T OPEN 36L

36LYD001