ABB BALDOR RELIANCE

Customer information packet

L1307M

.75HP, 1725RPM, 1PH, 60HZ, 56, 3428L, OPEN, F1
Class - None
Division - Not Applicable

Copyright © All product information within this document is subject to ABB Motors and Mechanical Inc. copyright © protection, unless otherwise noted.
11/23/2026 2:43:22 AM

Specifications

Enclosure	OPEN
Frame	56
Frame Material	Steel
Frequency	60.00 Hz
Haz Area Class and Group	None
Haz Area Division	Not Applicable
Motor Letter Type	Cap Start, Induction Run
Output @ Frequency	.750 HP @ 60 HZ
Phase	1
Synchronous Speed @ Frequency	1800 RPM @ 60 HZ
Voltage @ Frequency	115.0 V @ 60 HZ
	230.0 V @ 60 HZ
Agency Approvals	UR
	CSA
Ambient Temperature	40 °C
Auxiliary Box	NO AUXILLARY BOX
Auxiliary Box Lead Termination	None
Base Indicator	Rigid
Bearing Grease Type	Polyrex EM (-20F +300F)
Blower	None
Current @ Voltage	10.200 A @ 115.0 V
	5.100 A @ 230.0 V
	6.000 A @ 208.0 V
Design Code	N
Drip Cover	No Drip Cover
Duty Rating	CONT
Efficiency @ 100% Load	68.0 %
Electrically Isolated Bearing	Not Electrically Isolated
Feedback Device	NO FEEDBACK
Front Face Code	Standard
Front Shaft Indicator	None
Heater Indicator	No Heater

Part Detail

Revision	AE
Type	AC
Mech. spec.	34F074
Base	
Status	INA/A
Elec. spec.	34WGW197
Layout	34LYF074
Eff. date	03-08-2017
CD Diagram	CD0269
Poles	04
Leads	6#18,1#14 #4TH
Proprietary	False
Created date	01-01-0001

High Voltage Full Load Amps	5.1 a
Insulation Class	B
Inverter Code	Not Inverter
KVA Code	K
Lifting Lugs	No Lifting Lugs
Locked Bearing Indicator	No Locked Bearing
Motor Lead Exit	Ko Box
Motor Lead Quantity/Wire Size	6 @ 18 AWG
Motor Lead Termination	Flying Leads
Motor Standards	NEMA
Motor Type	3428L
Mounting Arrangement	F1
Number of Poles	4
Overall Length	11.51 IN
Power Factor	68
Product Family	General Purpose
Pulley End Bearing Type	Ball
Pulley Face Code	Standard
Pulley Shaft Indicator	Standard
Rodent Screen	None
RoHS Status	ROHS COMPLIANT
Service Factor	1.25
Shaft Diameter	0.625 IN
Shaft Extension Location	Pulley End
Shaft Ground Indicator	No Shaft Grounding
Shaft Rotation	Reversible
Shaft Slinger Indicator	No Slinger
Speed	1725 rpm
Speed Code	Single Speed
Starting Method	Direct on line
Thermal Device - Bearing	None
Thermal Device - Winding	None
Vibration Sensor Indicator	No Vibration Sensor
Winding Thermal 1	Manual Thermal Overload

Winding Thermal 1 Location	SB
Winding Thermal 2	None

Nameplate

	NP1257L							
CAT.NO.	L1307M							
SPEC.	34F74W197							
HP	.75							
VOLTS	115/230							
AMP	10.2/5.1							
RPM	1725							
FRAME	56	**HZ**	60		**PH**	1		
SER.F.	1.25//	**CODE**	K	**DES**	N	**CL**	B	
NEMA-NOM-EFF	68	**PF**	68					
RATING	40C AMB-CONT							
CC								
DE	6203	**ODE**	6203					
ENCL	OPEN	**SN**						
	SFA 11.4/5.7							

AC Induction Motor Performance Data
Record # 6916
Typical performance - not guaranteed values

Winding: 34WGW197-R001	**Type:** 3428L	**Enclosure:** OPEN

Nameplate Data				**230 V, 60 Hz: High Voltage Connection**	
Rated Output (HP)			.75	**Full Load Torque**	2.25 LB-FT
Volts			115/230	**Start Configuration**	direct on line
Full Load Amps			10.2/5.1	**Breakdown Torque**	5.5 LB-FT
R.P.M.			1725	**Pull-up Torque**	4.5 LB-FT
Hz	60	**Phase**	1	**Locked-rotor Torque**	9.5 LB-FT
NEMA Design Code	N	**KVA Code**	K	**Starting Current**	31 A
Service Factor (S.F.)			1.25	**No-load Current**	3.9 A
NEMA Nom. Eff.	68	**Power Factor**	68	**Line-line Res. @ 25ºC**	3.1 Ω A Ph 1.64 Ω B Ph
Rating - Duty			40C AMB-CONT	**Temp. Rise @ Rated Load**	74°C
S.F. Amps			11.4/5.7	**Temp. Rise @ S.F. Load**	90°C

Load Characteristics 230 V, 60 Hz, 0.75 HP

% of Rated Load	**25**	**50**	**75**	**100**	**125**	**150**	**S.F.**
Power Factor	35	49	63	70	76	80	76
Efficiency	45.4	59.1	62.7	66.7	66.8	64.4	66.8
Speed	1783	1770	1754	1737	1717	1692	1717
Line amperes	4.05	4.25	4.8	5.3	6.1	7	6.1

ABB Motors and Mechanical Inc.

WINDING # 34WGW197

0.75 HP 1 PH 60 HZ 1725 RPM 230 V 3428L

Typical performance - not guaranteed values.

TORQUES(LB-FT): PO=5.5 PU=4.5 LR=9.5 LRA=31

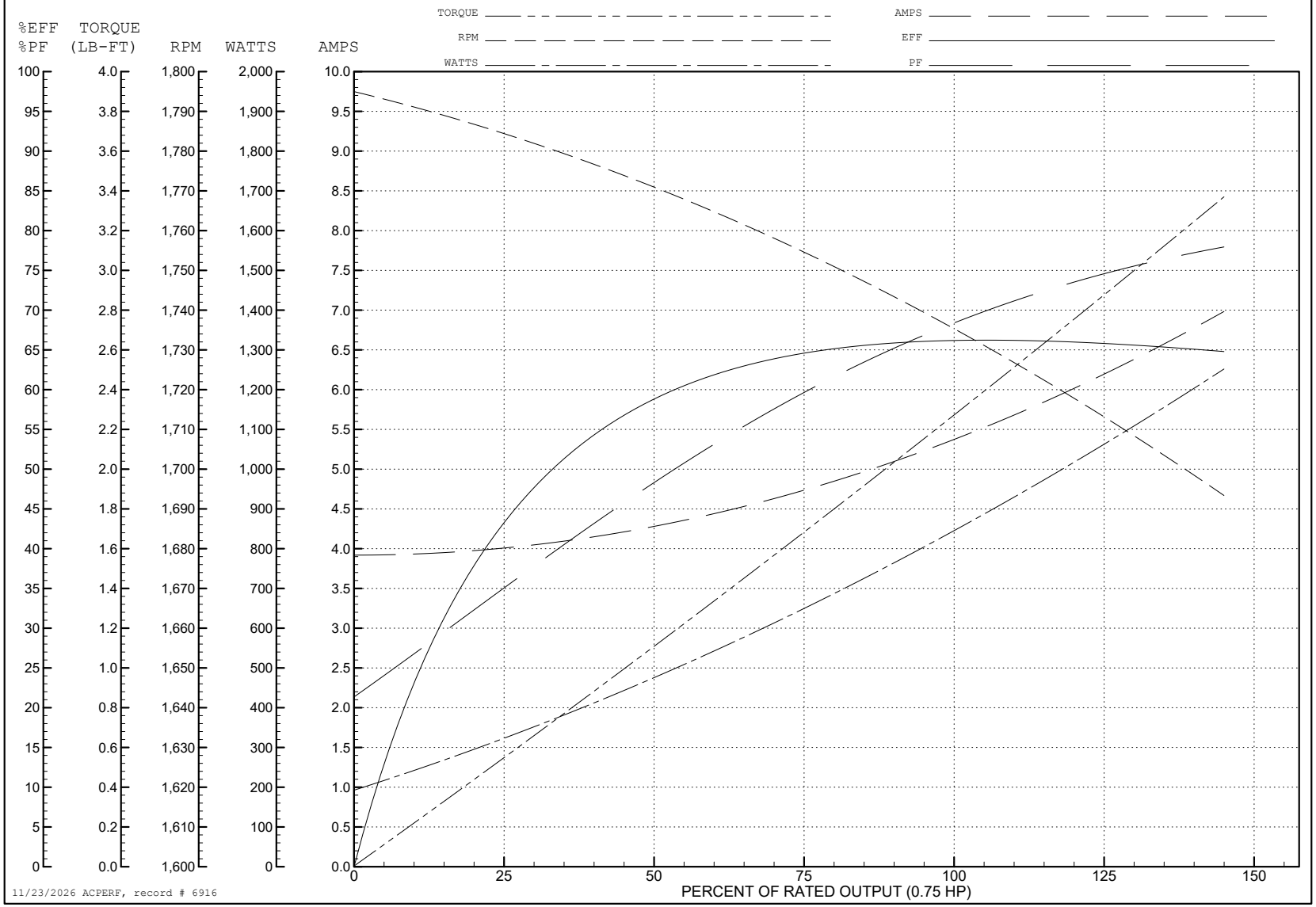

11/23/2026 ACPERF, record # 6916

AC Induction Motor Performance Data
Record # 55550
Typical performance - not guaranteed values

Winding: 34WGW197-R001	**Type:** 3428L	**Enclosure:** OPEN

Nameplate Data			**115 V, 60 Hz: Low Voltage Connection**	
Rated Output (HP)		.75	**Full Load Torque**	2.25 LB-FT
Volts		115/230	**Start Configuration**	direct on line
Full Load Amps		10.2/5.1	**Breakdown Torque**	5.5 LB-FT
R.P.M.		1725	**Pull-up Torque**	4.5 LB-FT
Hz	60 **Phase**	1	**Locked-rotor Torque**	9.5 LB-FT
NEMA Design Code	N **KVA Code**	K	**Starting Current**	62 A
Service Factor (S.F.)		1.25	**No-load Current**	7.8 A
NEMA Nom. Eff.	68 **Power Factor**	68	**Line-line Res. @ 25ºC**	0.732 Ω A Ph 1.7 Ω B Ph
Rating - Duty		40C AMB-CONT	**Temp. Rise @ Rated Load**	74°C
S.F. Amps		11.4/5.7	**Temp. Rise @ S.F. Load**	90°C
			Locked-rotor Power Factor	94.7
			Rotor inertia	0.0665 LB-FT2

Load Characteristics 115 V, 60 Hz, 0.75 HP

% of Rated Load	**25**	**50**	**75**	**100**	**125**	**150**	**S.F.**
Power Factor	34	49	61	68	73	78	73
Efficiency	45.4	59.3	62.8	66.7	66.8	64.5	66.8
Speed	1783	1770	1754	1737	1717	1692	1717
Line amperes	8.1	8.5	9.6	10.6	12.2	14	12.2

ABB Motors and Mechanical Inc.

WINDING # 34WGW197

Typical performance - not guaranteed values.

0.75 HP 1 PH 60 HZ 1725 RPM 115 V 3428L

TORQUES(LB-FT): PO=5.5 PU=4.5 LR=9.5 LRA=62

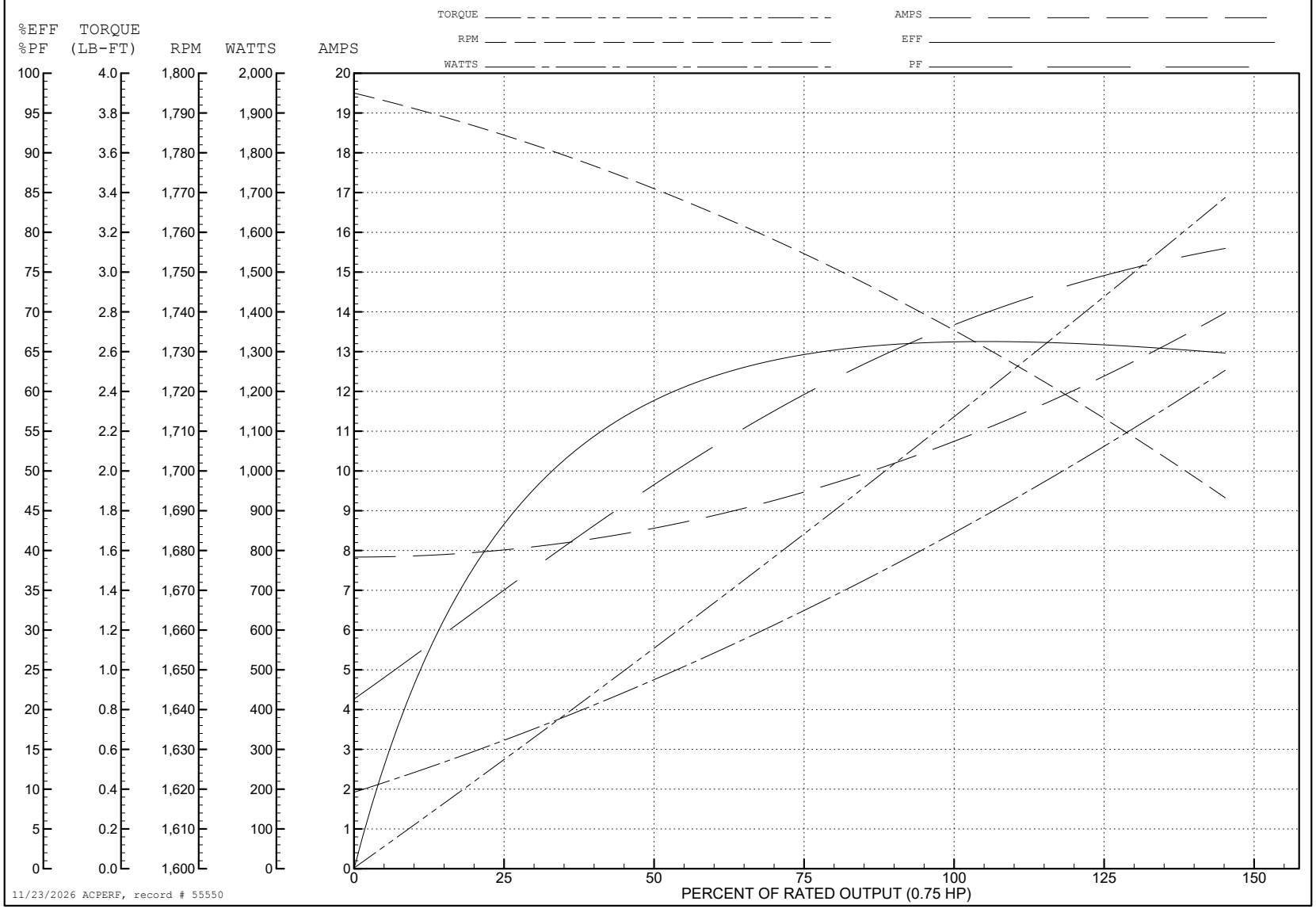

34LYF074

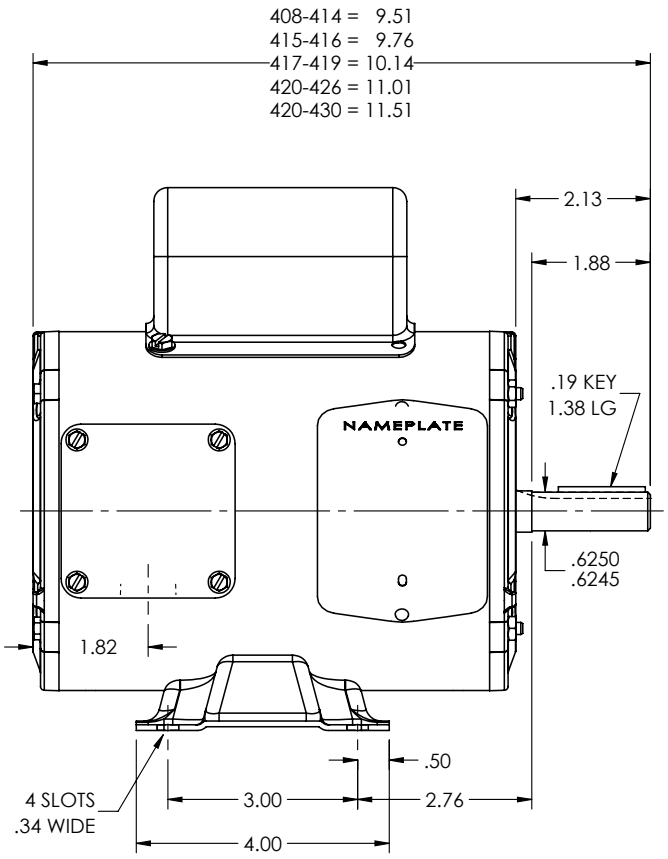

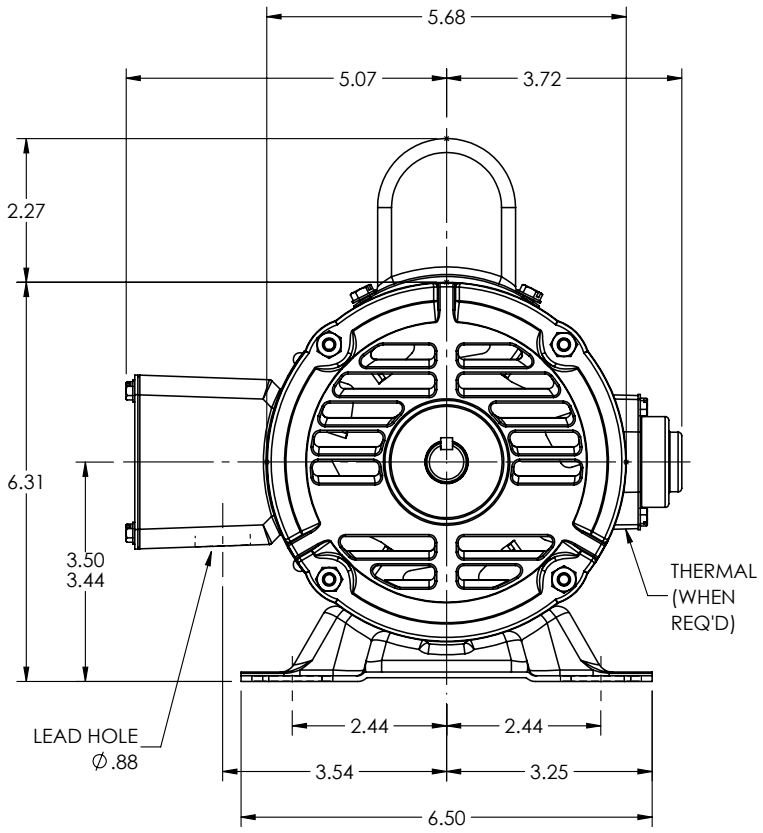

CUSTOMER IS RESPONSIBLE FOR DETERMINING THAT THE PRODUCT WILL PERFORM SUITABLY IN THE INTENDED APPLICATION

REV. DESC: CLEAN UP DIMENSIONING			
REV: J	VERSION: 06	REVISED: 08:16:49 10/02/2025	TDR: 000001264465
34LYF074	MODEL NO. 34LYF074		REF: -
	BY: ENJEFD0		

BALDOR - RELIANCE®

STD HORZ MODEL 34L NEMA 56 OPEN W/LG CAPAC & 3 PH ER

34LYF074

CD0269

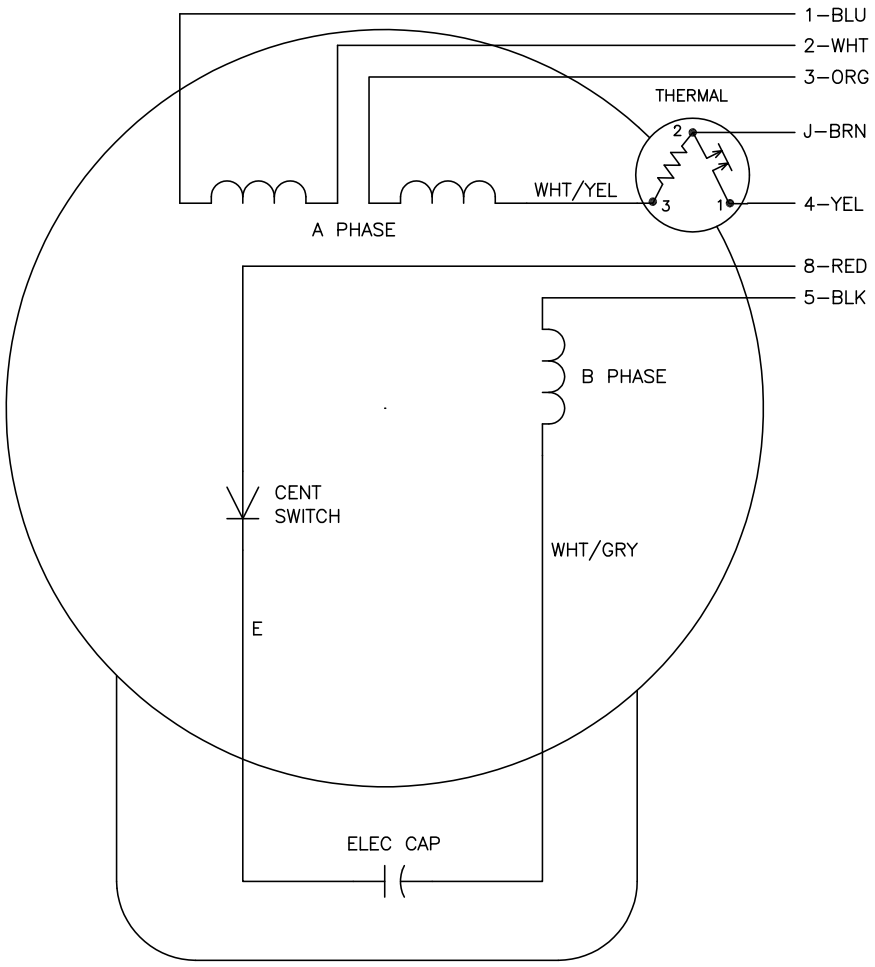

	LINE A	LINE B	JOIN	JOIN
HIGH STD	1,8	4	2,3,5	J
HIGH OPP	1,5	4	2,3,8	J
LOW STD	1,3,8	4	–	2,J,5
LOW OPP	1,3,5	4	–	2,J,8

NOTES:

1. STANDARD ROTATION IS CCW FACING END OPPOSITE SHAFT EXTENSION.
2. MULTIPLE CAPACITORS ARE CONNECTED IN PARALLEL UNLESS OTHERWISE SPECIFIED.
3. LEAD COLORS ARE OPTIONAL. LEADS MUST ALWAYS BE NUMBERED AS SHOWN.

CD0269

REV. DESC: REVISE TO SHOW OPTIONAL COLORS			BALDOR ELECTRIC Co.
REV. LTR: E	BY: JLP	REVISED: 04/08/99 1:07	TDR: 0178636
CD0269		FILE: AAA00007421	MDL: –
		MTL: –	TYPE L, DV, REV, THERMAL, B PH AMPS THRU HTR HVC, 7 LEAD