ABB BALDOR RELIANCE

Customer information packet

JSM3107

.5HP, 3450RPM, 3PH, 60HZ, 56YZ, 3413M, OPEN, F1
Class - None
Division - Not Applicable

Copyright © All product information within this document is subject to ABB Motors and Mechanical Inc. copyright © protection, unless otherwise noted.
11/25/2026 9:10:22 PM

Specifications

Enclosure	OPEN
Frame	56YZ
Frame Material	Steel
Frequency	60.00 Hz
Haz Area Class and Group	None
Haz Area Division	Not Applicable
Motor Letter Type	Three Phase
Output @ Frequency	.500 HP @ 60 HZ
Phase	3
Synchronous Speed @ Frequency	3600 RPM @ 60 HZ
Voltage @ Frequency	230.0 V @ 60 HZ
	460.0 V @ 60 HZ
Agency Approvals	UR
	CSA
Ambient Temperature	40 °C
Auxiliary Box	NO AUXILLARY BOX
Auxiliary Box Lead Termination	None
Base Indicator	No Mounting
Bearing Grease Type	Polyrex EM (-20F +300F)
Blower	None
Current @ Voltage	1.200 A @ 460.0 V
	2.400 A @ 230.0 V
	3.100 A @ 208.0 V
Design Code	B
Drip Cover	Drip Cover
Duty Rating	CONT
Efficiency @ 100% Load	70.0 %
Electrically Isolated Bearing	Not Electrically Isolated
Feedback Device	NO FEEDBACK
Front Face Code	Drip Cover Mounting
Front Shaft Indicator	None
Heater Indicator	No Heater

Part Detail

Revision	U
Type	AC
Mech. spec.	34L408
Base	
Status	PRD/A
Elec. spec.	34WG2718
Layout	34LYL408
Eff. date	10-28-2024
CD Diagram	CD0005
Poles	02
Leads	9#18
Proprietary	False
Created date	08-05-2009

High Voltage Full Load Amps	1.2 a
Insulation Class	B
Inverter Code	Not Inverter
KVA Code	N
Lifting Lugs	No Lifting Lugs
Locked Bearing Indicator	Locked Bearing
Motor Lead Exit	Terminal Panel Or Lead Hole
Motor Lead Quantity/Wire Size	9 @ 18 AWG
Motor Lead Termination	Flying Leads
Motor Standards	NEMA
Motor Type	3413M
Mounting Arrangement	F1
Number of Poles	2
Overall Length	11.40 IN
Power Factor	65
Product Family	General Purpose
Pulley End Bearing Type	Ball
Pulley Face Code	Pool Pump
Pulley Shaft Indicator	Ext Thread & Tapped Hole
Rodent Screen	None
RoHS Status	ROHS COMPLIANT
Service Factor	1.60
Shaft Diameter	0.625 IN
Shaft Extension Location	Pulley End
Shaft Ground Indicator	No Shaft Grounding
Shaft Rotation	Reversible
Shaft Slinger Indicator	No Slinger
Speed	3450 rpm
Speed Code	Single Speed
Starting Method	Direct on line
Thermal Device - Bearing	None
Thermal Device - Winding	None
Vibration Sensor Indicator	No Vibration Sensor
Winding Thermal 1	None

Winding Thermal 2	None

Nameplate

NP1256L											
CAT.NO.	JSM3107										
SPEC.	34L408-2718										
HP	.5										
VOLTS	230/460										
AMP	2.4/1.2										
RPM	3450										
FRAME	56YZ		**HZ**	60			**PH**	3			
SER.F.	1.60	**CODE**	N	**DES**	B	**CLASS**		B			
NEMA-NOM-EFF	70	**PF**	65								
RATING	40C AMB-CONT										
CC											
DE	6203		**ODE**	6203							
ENCL	OPEN	**SN**									
	SFA 2.8/1.4										

AC Induction Motor Performance Data
Record # 6655
Typical performance - not guaranteed values

Winding: 34WG2718-R001	**Type:** 3413M	**Enclosure:** OPEN

Nameplate Data				**460 V, 60 Hz: High Voltage Connection**	
Rated Output (HP)			.5	**Full Load Torque**	0.75 LB-FT
Volts			230/460	**Start Configuration**	direct on line
Full Load Amps			2.4/1.2	**Breakdown Torque**	5.3 LB-FT
R.P.M.			3450	**Pull-up Torque**	3.38 LB-FT
Hz	60	**Phase**	3	**Locked-rotor Torque**	3.8 LB-FT
NEMA Design Code	B	**KVA Code**	N	**Starting Current**	8.75 A
Service Factor (S.F.)			1.6	**No-load Current**	0.88 A
NEMA Nom. Eff.	70	**Power Factor**	65	**Line-line Res. @ 25ºC**	6 Ω
Rating - Duty			40C AMB-CONT	**Temp. Rise @ Rated Load**	31°C
S.F. Amps			2.8/1.4	**Temp. Rise @ S.F. Load**	44°C

Load Characteristics 460 V, 60 Hz, 0.5 HP

% of Rated Load	**25**	**50**	**75**	**100**	**125**	**150**	**S.F.**
Power Factor	33	44	55	65	69	75	76
Efficiency	46.9	60.4	67.2	71.3	72.1	72.7	73.2
Speed	3574	3553	3533	3507	3486	3456	3447
Line amperes	0.88	0.92	0.96	1.05	1.15	1.3	1.36

ABB Motors and Mechanical Inc.

WINDING # 34WG2718

0.5 HP 3 PH 60 HZ 3450 RPM 460 V 3413M

Typical performance - not guaranteed values.

TORQUES(LB-FT): PO=5.3 PU=3.38 LR=3.8 LRA=8.75

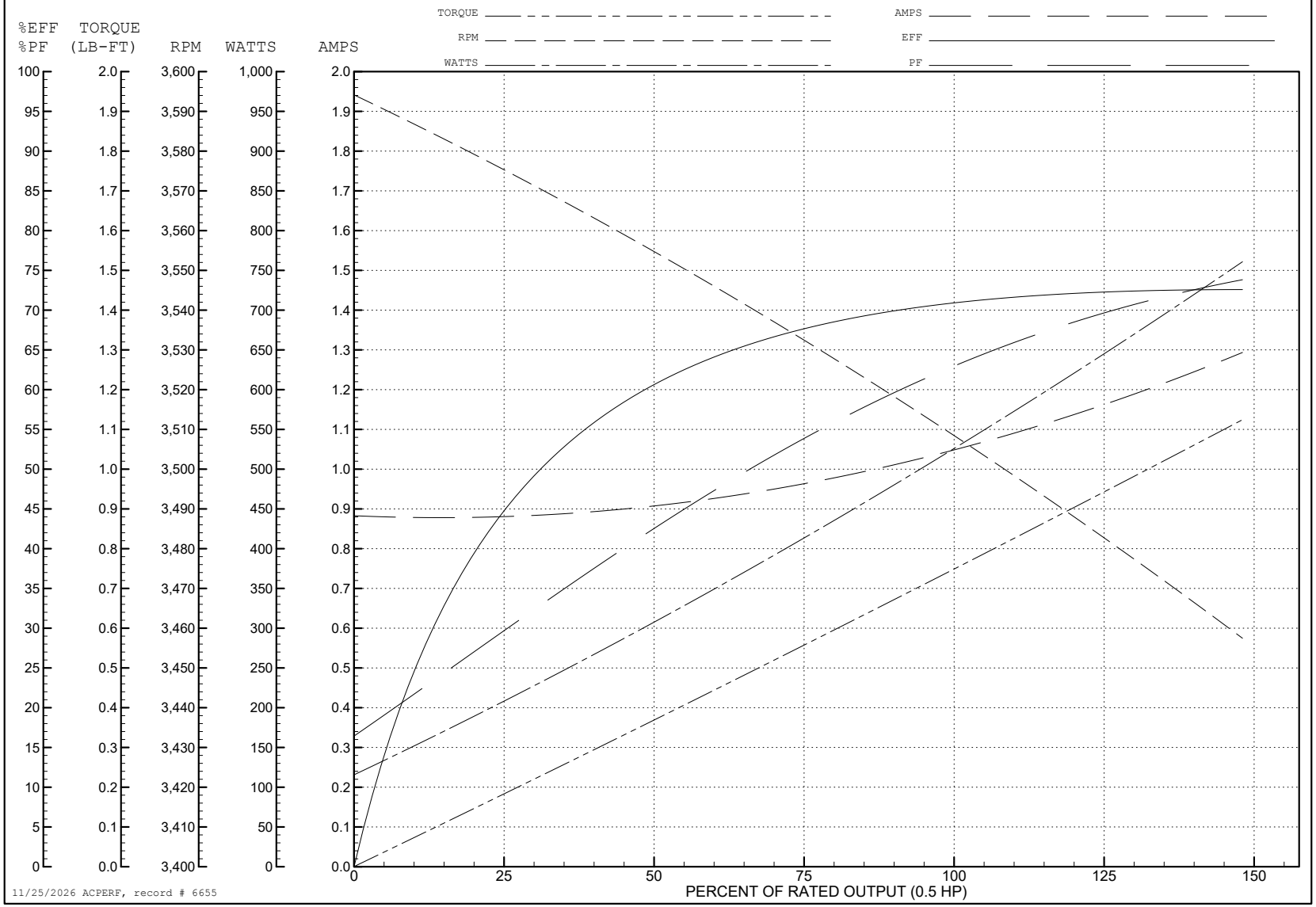

11/25/2026 ACPERF, record # 6655

34LYL408

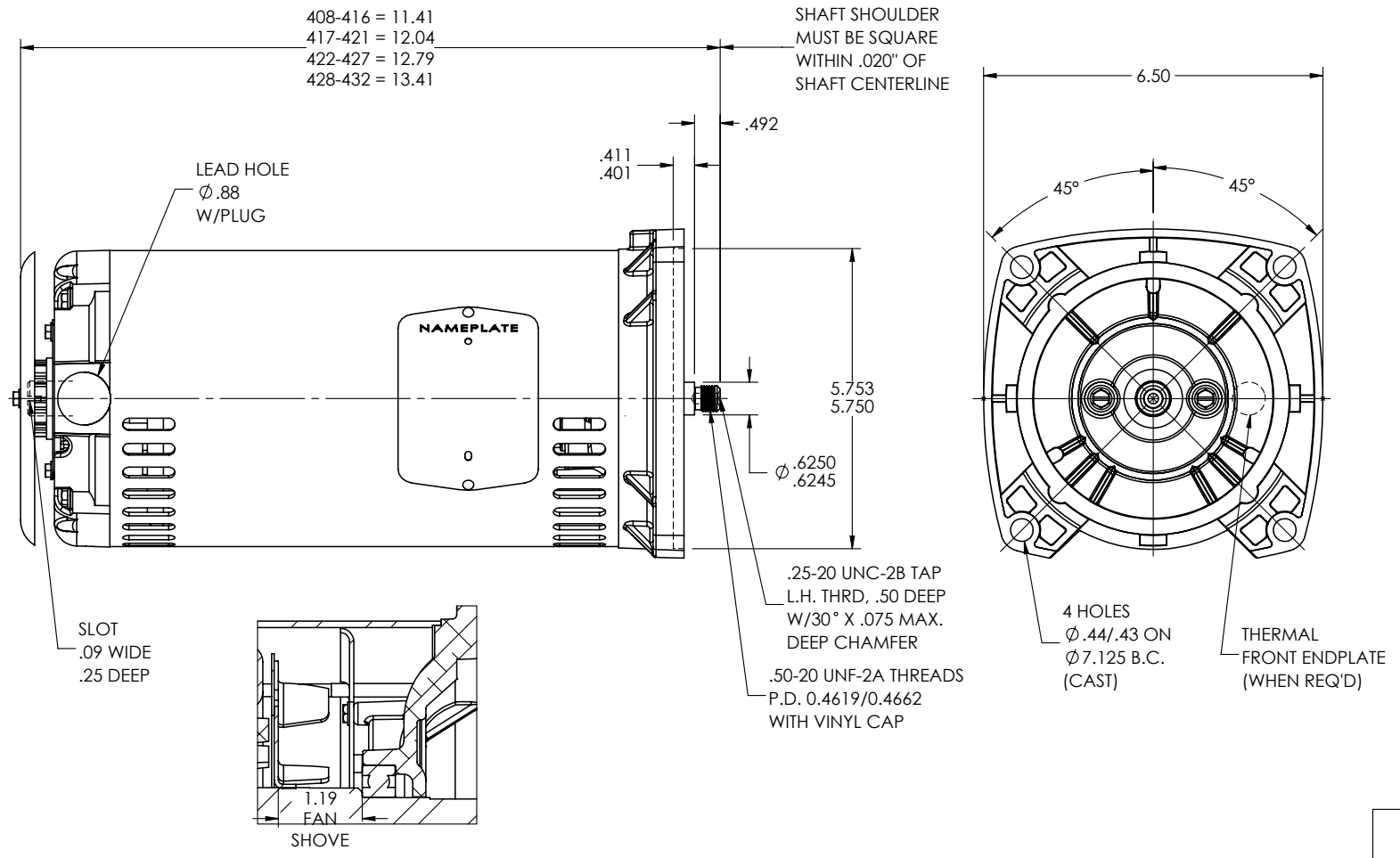

AIR BAFFLE DETAIL

CUSTOMER IS RESPONSIBLE FOR DETERMINING THAT THE PRODUCT WILL PERFORM SUITABLY IN THE INTENDED APPLICATION

REV. DESC: LOAD TO SOLIDWORKS - REV B			
REV: C	VERSION: 03	REVISED: 10:26:10 01/02/2023	TDR: 000001201165
34LYL408	MODEL NO. 34LYL408		REF: -
	BY: ENFRAJ0		

BALDOR - RELIANCE®

VERT 34M 56YZ OPEN W/TERM PANEL (POOL PUMP) W/S.S. SHAFT

34LYL408

CD0005

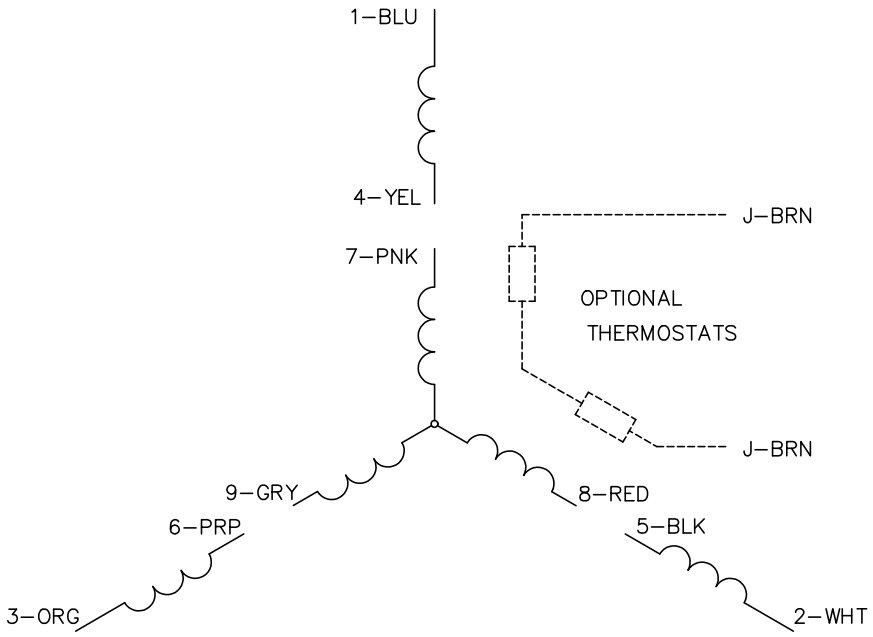

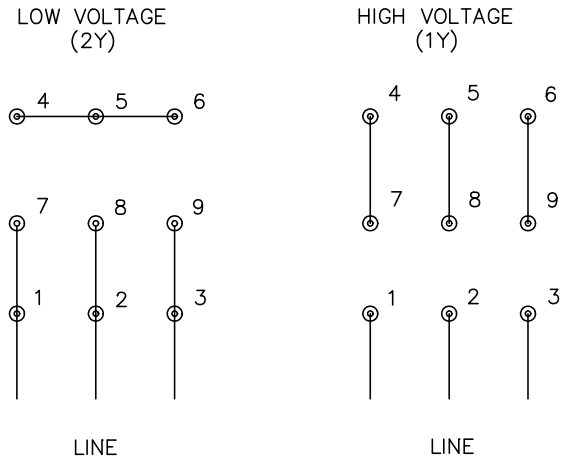

NOTES:

1. INTERCHANGE ANY TWO LINE LEADS TO REVERSE ROTATION.
2. OPTIONAL THERMOSTATS ARE PROVIDED WHEN SPECIFIED.
3. ACTUAL NUMBER OF INTERNAL PARALLEL CIRCUITS MAY BE A MULTIPLE OF THOSE SHOWN ABOVE.
4. LEAD COLORS ARE OPTIONAL. LEADS MUST ALWAYS BE NUMBERED AS SHOWN.

CD0005

REV. DESC: REVISE TO SHOW OPTIONAL COLORS			BALDOR ELECTRIC Co.
REV. LTR: E	BY: JLP	REVISED: 01/19/99 10:15	TDR: 0171435
CD0005		FILE: AAA00005140	MDL: –
		MTL: –	3PH, DV, 9 LEADS