35LYN833

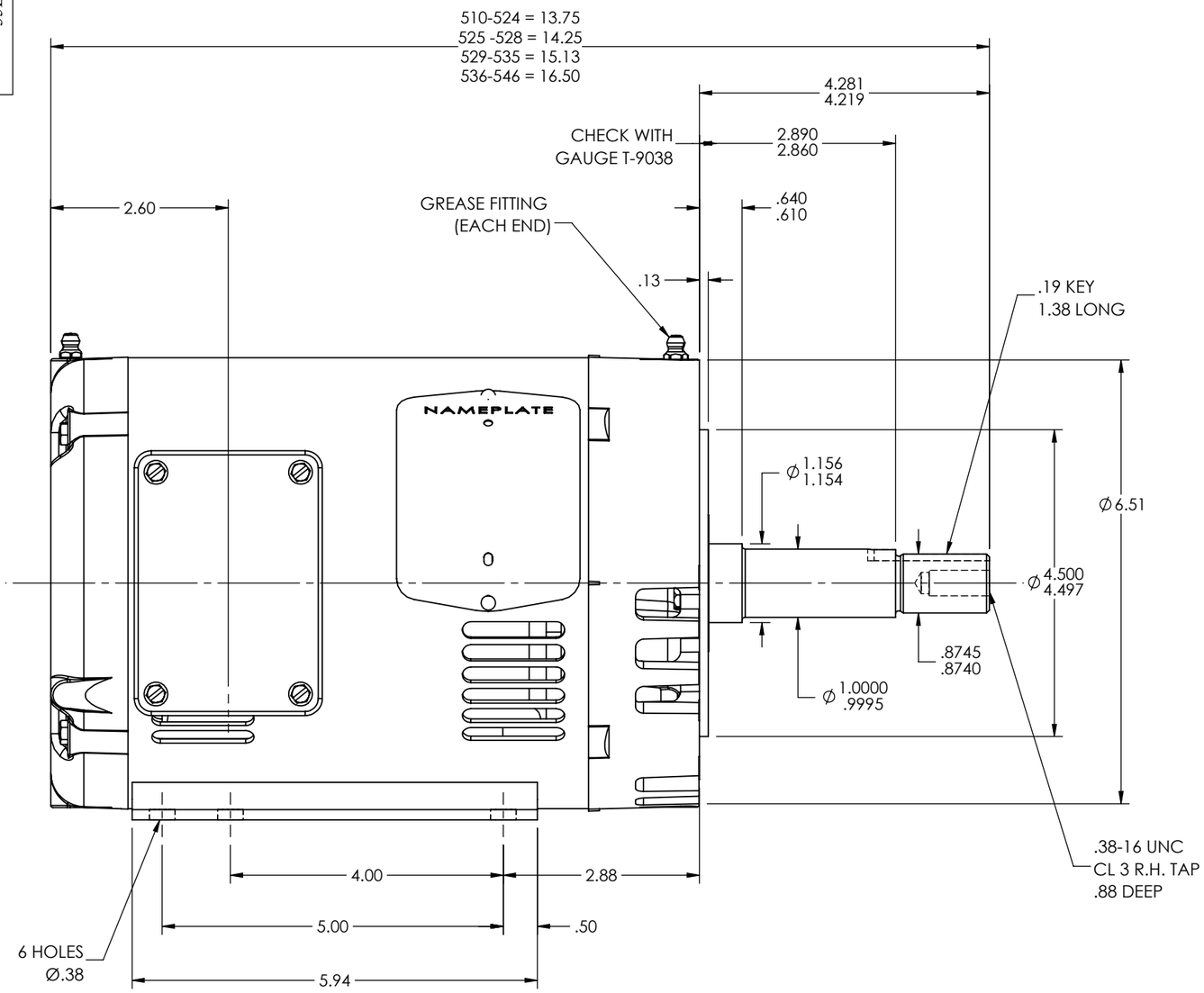

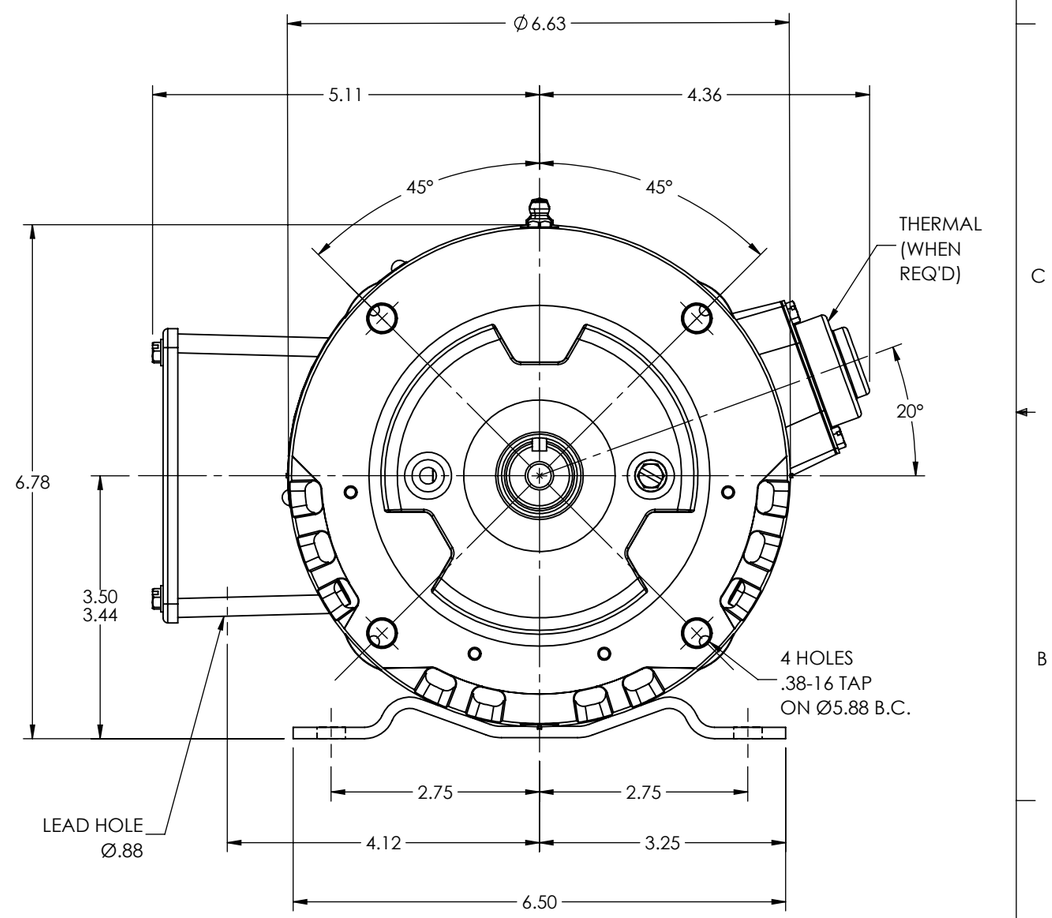

CUSTOMER IS RESPONSIBLE FOR DETERMINING THAT THE PRODUCT WILL PERFORM SUITABLY IN THE INTENDED APPLICATION

REV. DESC: ADD THERMAL DIMS AND THERMAL WHEN REQUIRED NOTE			
REV: L	VERSION: 08	REVISED: 02:41:42 04/04/2023	TDR: 000001205626
MODEL NO. 35LYN833			REF: -
BY: USBUFRA			B

BALDOR - RELIANCE®

HORZ 143-5JM OPSB 35M W/SCREENS
SH 1 OF 1

35LYN833