35LYSS629

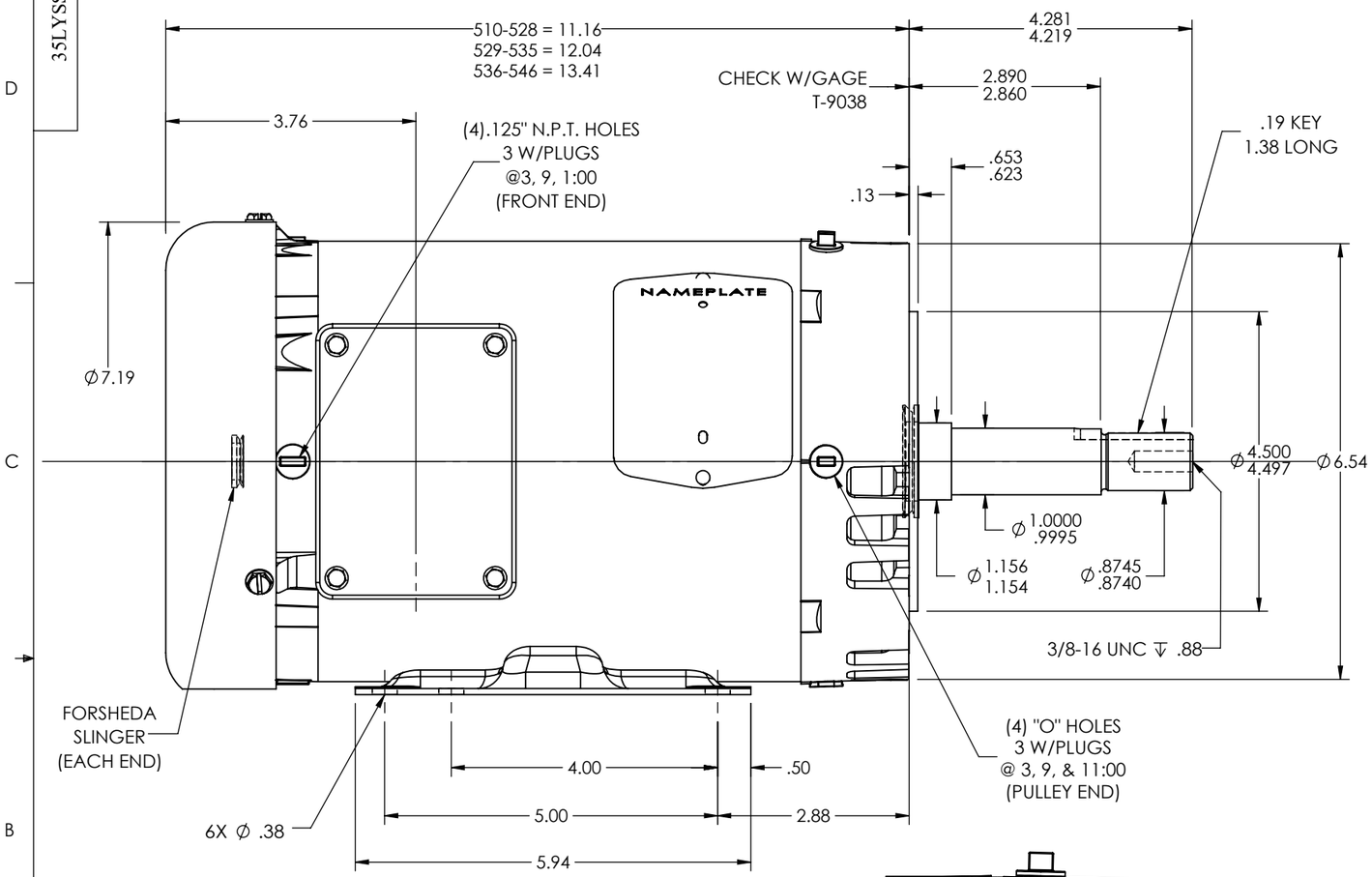


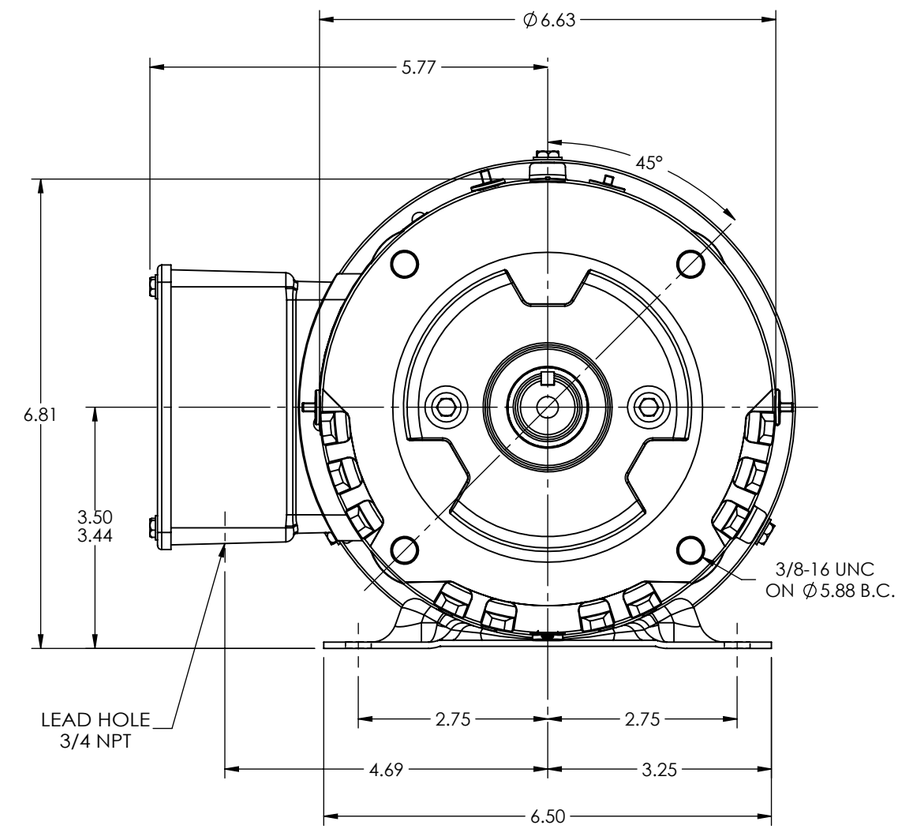


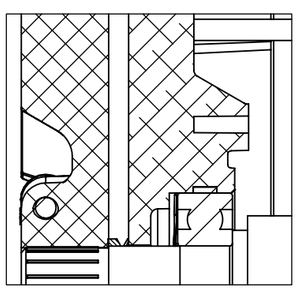

FRONT END DETAIL

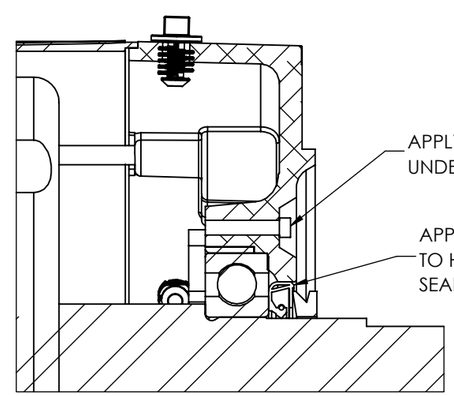


PULLEY END DETAIL

CUSTOMER IS RESPONSIBLE FOR DETERMINING THAT THE PRODUCT WILL PERFORM SUITABLY IN THE INTENDED APPLICATION

| | | | |
|---|---|---|---|
| REV. DESC: REVISE PU END DETAIL DRAWING | | | |
| REV: J | VERSION: 09 | REVISED: 04:39:31 08/28/2023 | TDR: 000001215574 |
| MODEL NO. 35LYSS629 | | | REF: - |
| BY: USJESOU | | | B |

BALDOR - RELIANCE®

HOR 143-5JM TEFC 35M WD W/.75 NPT LEAD HOLE
SH 1 of 1

35LYSS629