35LYF974

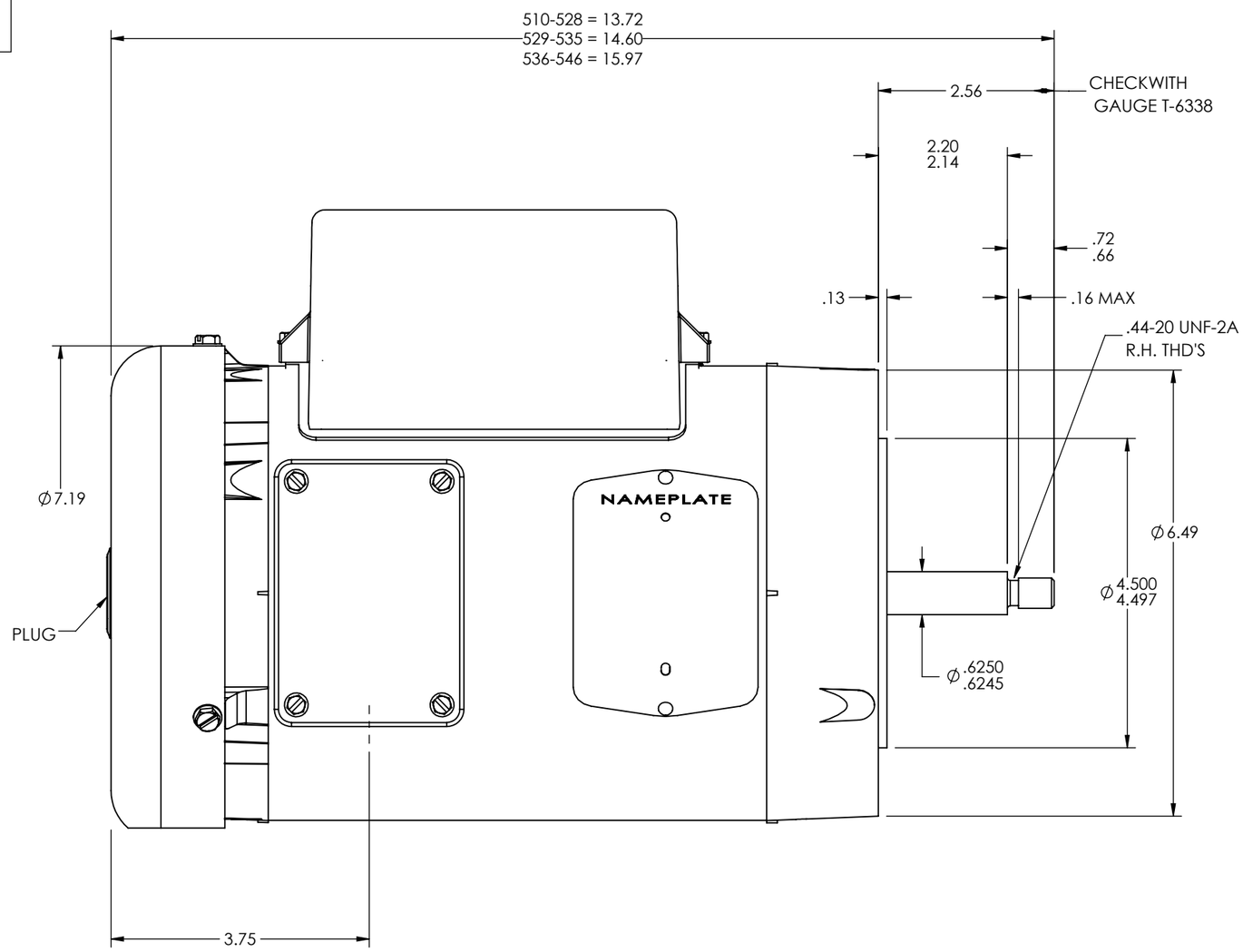

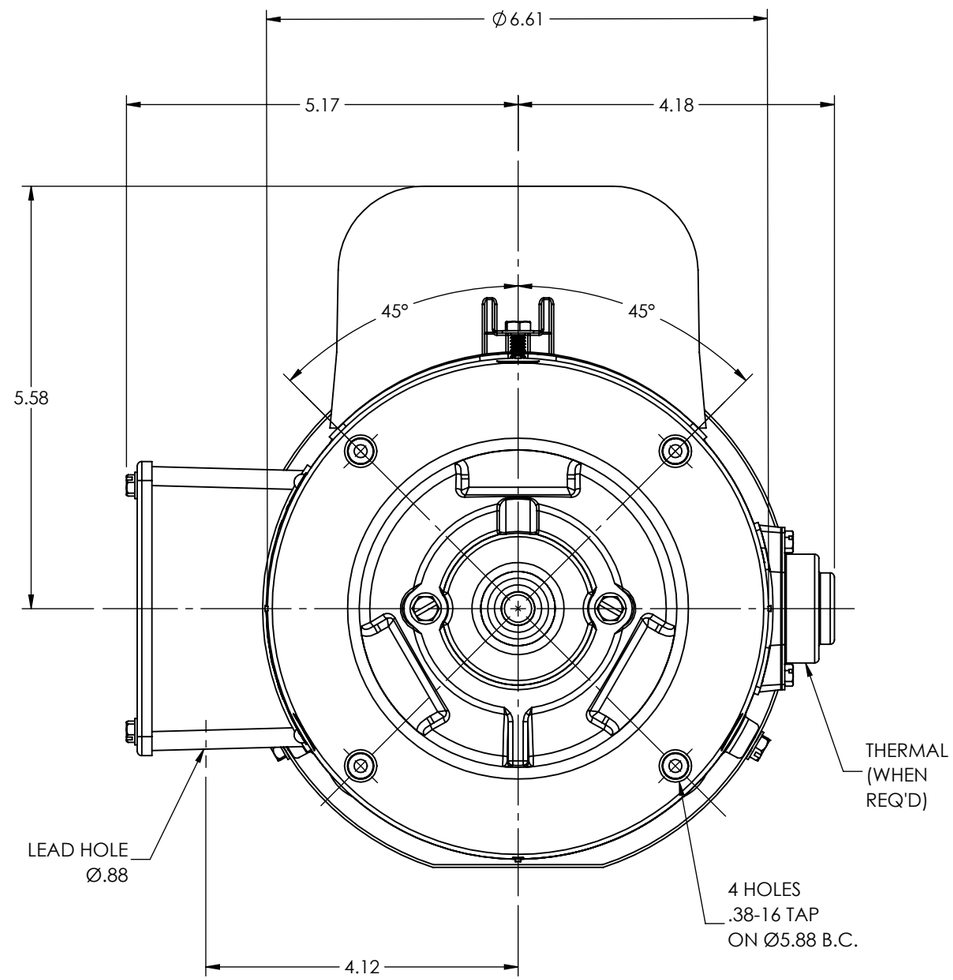

CUSTOMER IS RESPONSIBLE FOR DETERMINING THAT THE PRODUCT WILL PERFORM SUITABLY IN THE INTENDED APPLICATION

REV. DESC: UPDATE SHAFT TO T SHAFT			
REV: M	VERSION: 06	REVISED: 02:37:45 09/26/2024	TDR: 000001241361
MODEL NO. 35LYF974			REF: -
BY: USERBOG1			B

BALDOR - RELIANCE®

STD VERT 56J TEFC 35LC
SH 1 OF 1

35LYF974