35LYTT996

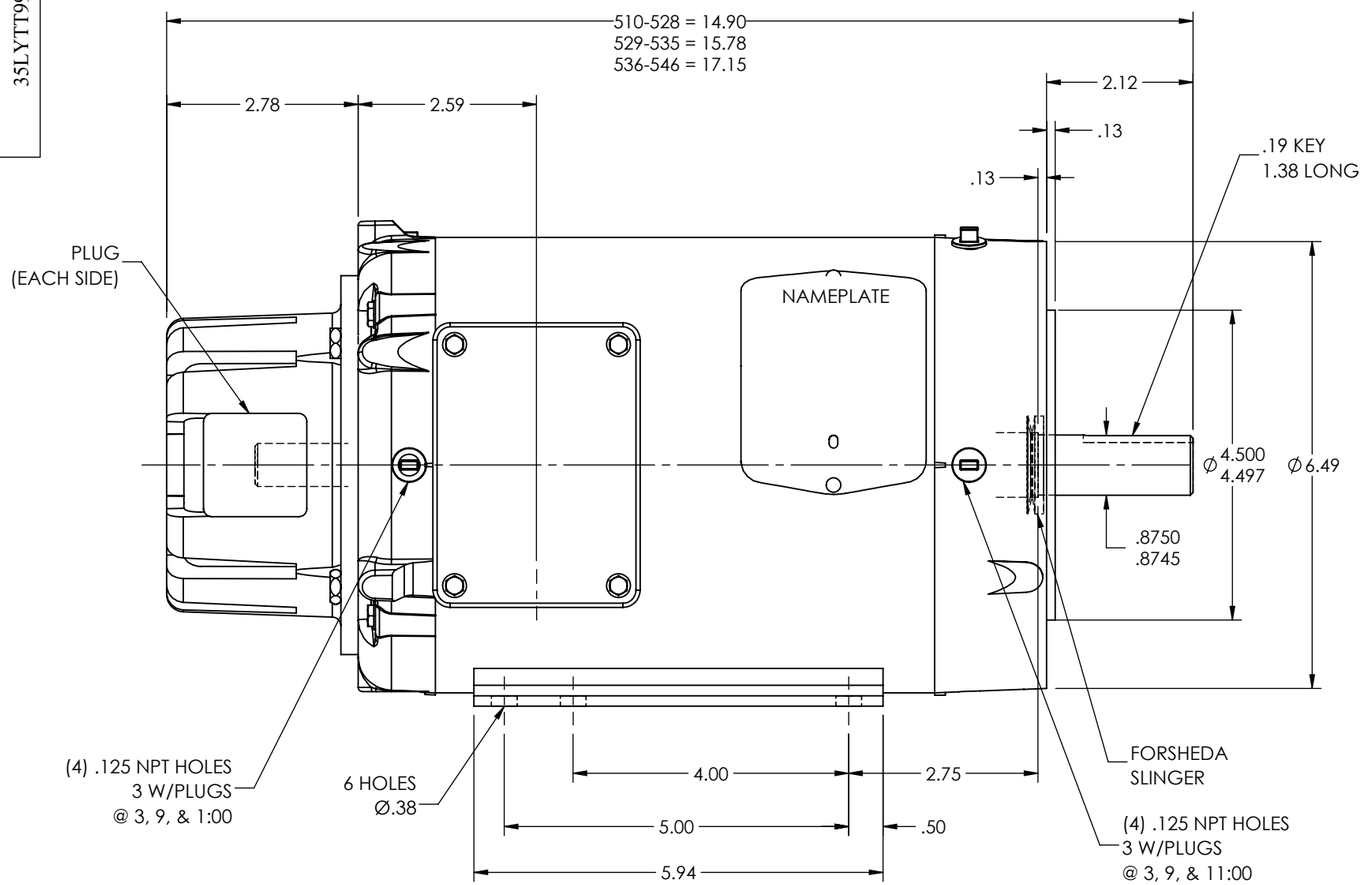


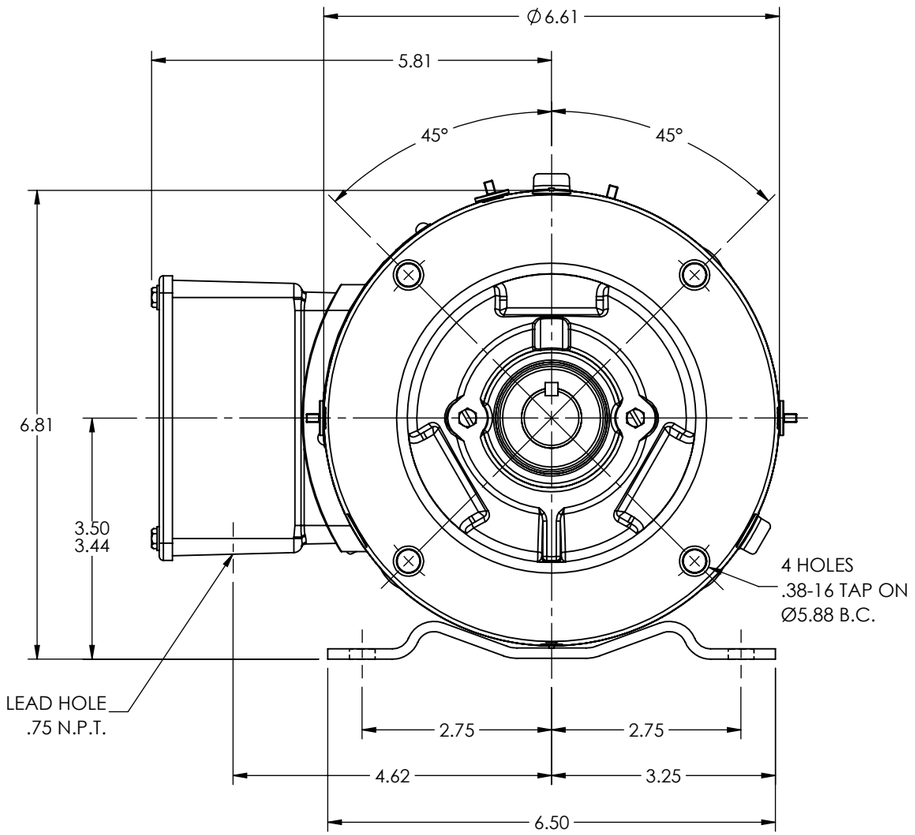


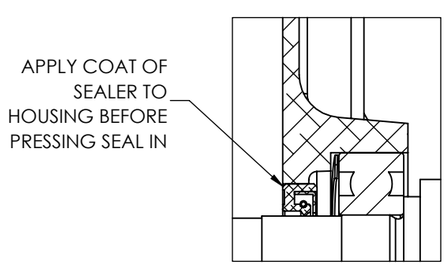


FRONT END DETAIL

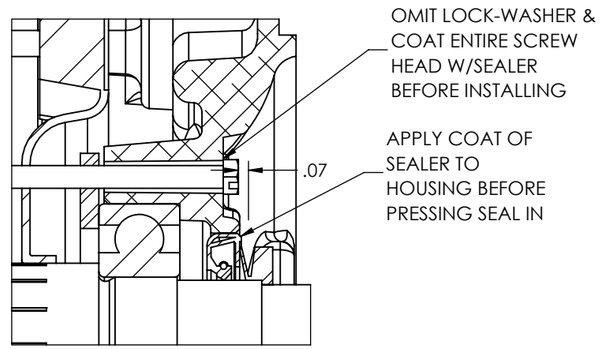


PULLEY END DETAIL

CUSTOMER IS RESPONSIBLE FOR DETERMINING THAT THE PRODUCT WILL PERFORM SUITABLY IN THE INTENDED APPLICATION

| | | | |
|---|---|---|---|
| REV. DESC: LOAD INOPC CREATED SWD DRG INTO BUS - PACKAGE 13 | | | |
| REV: C | VERSION: 03 | REVISED: 11:43:22 12/20/2018 | TDR: 000001094435 |
| MODEL NO. 35LYTT996 | | | REF: - |
| BY: USBUFRA | | | B |

BALDOR - RELIANCE®

HOR 143-5TC TENV 35M WD INV (THRU-SH ENC W/ COVER) 2 POLE
SH 1 of 1

35LYTT996