617573-083

RPM-AC FINNED FRAME VARIABLE SPEED ALTERNATING CURRENT MOTOR

FL2570Z

ENCLOSURE: TOTALLY ENCLOSED

MOUNTING: FOOT / NEMA 250TC C-FACE

DRIVE METHOD: COUPLED OR BELTED

COOLING: FAN COOLED

ACCESSORIES: PROVISIONS FOR TACHOMETER MOUNTING ONLY WHEN SPECIFIED

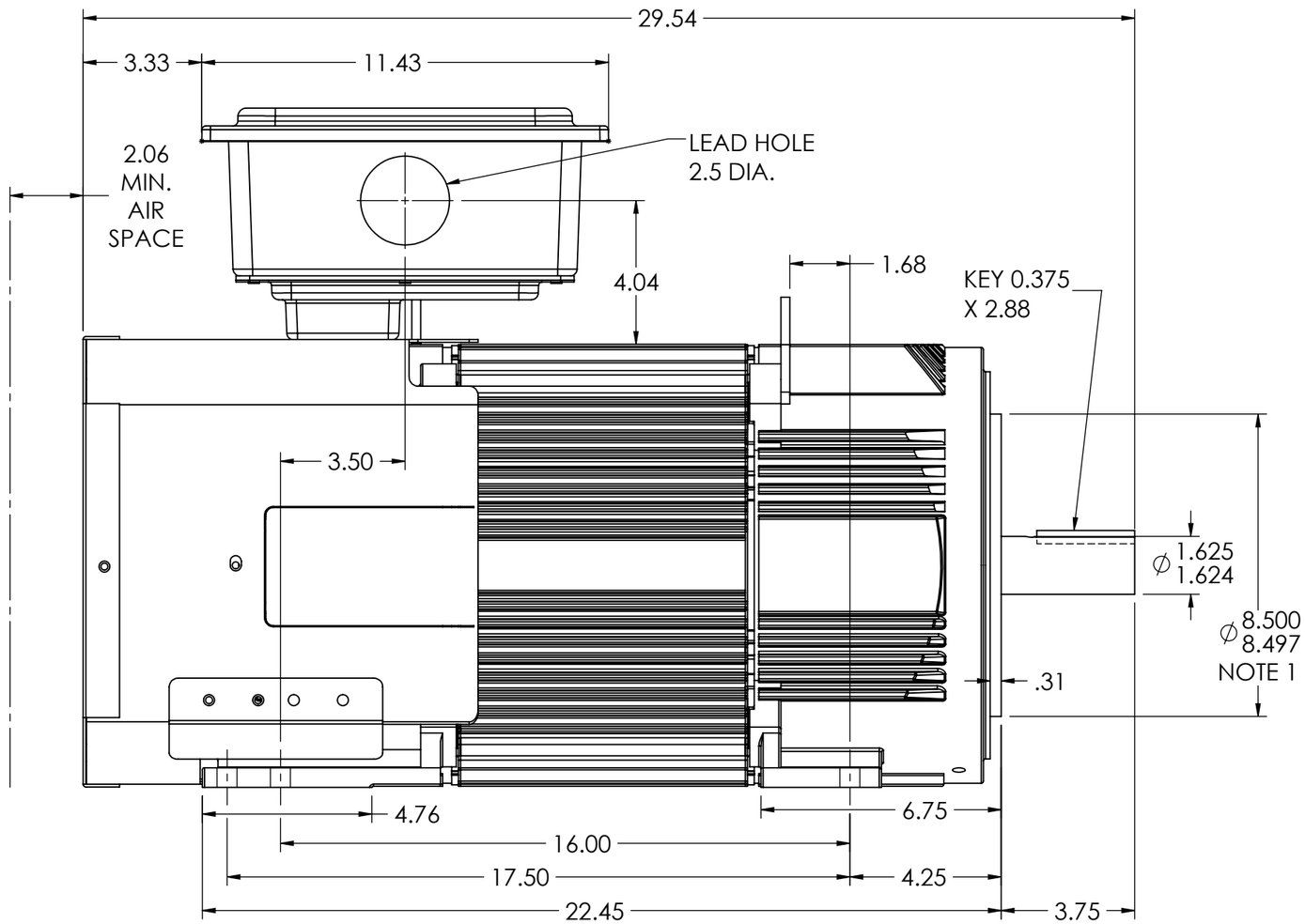

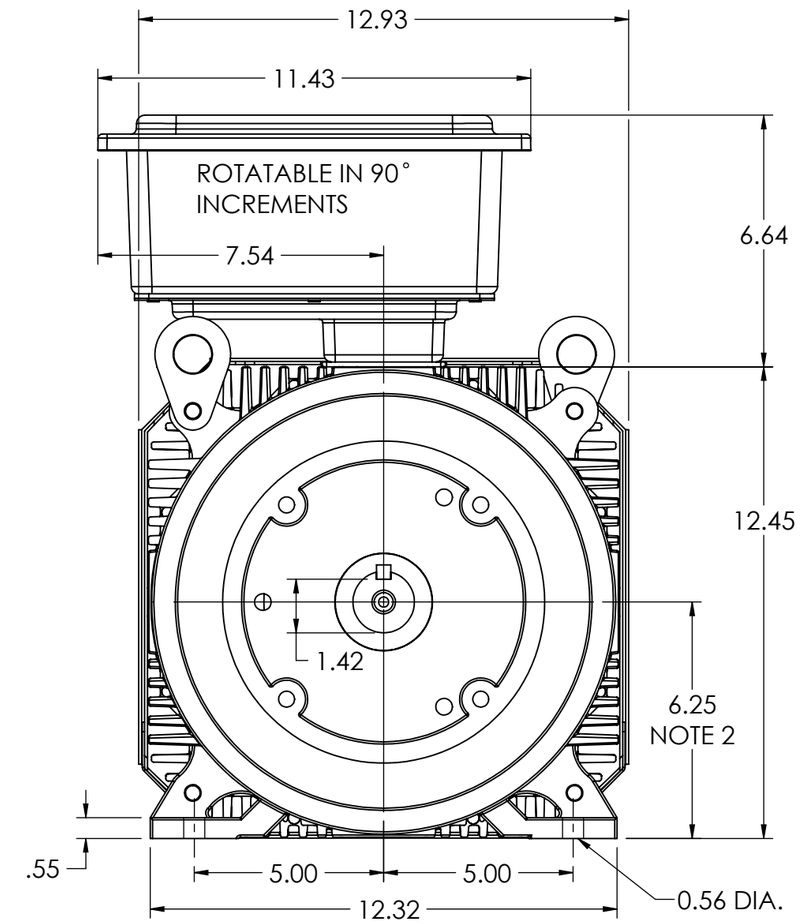

NOTE 1: C-FACE & TACHOMETER MOUNTING
1/2-13 TAP 1.00 DEEP, ON A 7.25 DIA. BOLT CIRCLE
FACE RUNOUT AND ECCENTRICITY 0.004 MAX T.I.R.

NOTE 2: SHAFT HEIGHT WILL NOT BE EXCEEDED.
SHIMS UP TO .03 INCHES IN THICKNESS ARE USUALLY
REQUIRED FOR COUPLED OR GEARED MACHINES.

NOTE 3: MAXIMUM PERMISSIBLE SHAFT RUNOUT WHEN MEASURED
AT END OF STD. SHAFT EXTENSION IS .002 T.I.R. UP TO AND
INCLUDING 1.625 DIA. AND .003 T.I.R. 1.625 TO 5 INCH DIA.

235 AMP MILL TERMINAL BOX SHOWN

MOTOR WEIGHT 475 LBS. (MAY VARY 15%)

DIMENSIONS ARE IN INCHES SCALE 1:1

CUSTOMER IS RESPONSIBLE FOR DETERMINING THAT BALDOR'S PRODUCT WILL PERFORM SUITABLY IN THE INTENDED APPLICATION.

REV. DESC: INITIAL RELEASE			
REV: -	VERSION: 00	REVISED: 10:52:24 11/02/2021	TDR: 000001180691
MODEL NO. 617573-083			
BY: USWATUR			B

BALDOR - RELIANCE®

DIM SHT FL2570C RPMAC TEFC F3 MILL BOX

617573-083