ABB BALDOR RELIANCE

Customer information packet

IDDRPM282004

200HP, 1750, 460V, RL2898, DPFV, F1

Copyright © All product information within this document is subject to ABB Motors and Mechanical Inc. copyright © protection, unless otherwise noted.
11/23/2026 3:17:52 AM

Specifications

Enclosure	DPFV
Frame	RL2898Z
Frame Material	Exposed Laminations
Frequency	60.00 Hz
Output @ Frequency	200.000 HP @ 60 HZ
Phase	3
Synchronous Speed @ Frequency	1800 RPM @ 60 HZ
Voltage @ Frequency	460.0 V @ 60 HZ
Agency Approvals	CCSA US
Auxiliary Box	NO AUXILLARY BOX
Base Indicator	Rigid
Bearing Grease Type	Polyrex EM (-20F +300F)
Current @ Voltage	237.000 A @ 460.0 V
Duty Rating	CONT
Feedback Device	NO FEEDBACK
Frame Prefix	RL
Heater Indicator	No Heater
High Voltage Full Load Amps	237.0 a
Insulation Class	H
IP Rating	NONE
Motor Standards	NEMA
Mounting Arrangement	F1
Overall Length	42.43 IN
Product Family	General Industrial
Pulley End Bearing Type	Ball
Pulley Face Code	Standard
Service Factor	1.00
Shaft Diameter	2.624 IN
Shaft Ground Indicator	Shaft Grounding
Shaft Rotation	Reversible
Speed	1760 rpm
Starting Method	Full Voltage

Part Detail

Revision	C
Type	AC
Mech. spec.	
Base	
Status	PRD/A
Elec. spec.	L1642A
Layout	617249-396
Eff. date	12-21-2022
CD Diagram	422927-001
Poles	04
Leads	
Proprietary	False
Created date	10-28-2021

Thermal Device - Bearing	None
Thermal Device - Winding	Normally Closed Thermostat

Nameplate

000613006MY

DUTY	HP	RPM	AMPS	VOLTS	HZ
CONT	200	1760	237	460	60
CONT	200	2700	241	460	92.2

CAT.NO.	IDDRPM282004		**SPEC. NO.**	R28-A000-0371			
SER.NO		**FR**	RL2898Z	**INSUL**	H		
PH.	3	**MAX SAFE SPEED**	5000	**AMB.**	40	**MIN. AMB.**	-25
DESIGN NO.	L1642A	**TYPE**		**ENCL.**	DPG-FV		
S.F.	1.00	**D.E. BRG.**	75BC02J30X				
ENCL MOD		**O.D.E. BRG.**	55BC02J30X				
	IP23						

REL S.O.	-	VOLTS	460	ENCLOSURE	DPFV	WYE CONN EQ CKT OHMS PER PHASE			
FRAME	RL2898	AMPS	237	MAX SAFE RPM	5000	(AT BASE RATING, 25 °C)			
HP	200	DUTY	CONT	IM (AMPS)	72	R1	.0208	X1	.148
BASE SPEED	1760	S.F.	1.0	P.F.@NL/FL	.052/.867	R2	.0154	X2	.153
PHASE/HERTZ	3/60	AMB °C/INSUL	40/H	WK^2 ($Lb-Ft^2$)	11.1			XM	3.75

RATED FULL LOAD DATA

	RPM	HP	TORQUE LB-FT	FUND VOLTS	FREQ-HZ	AMPS
BASE SPEED	1766	200	595	460	60	237
MAX SPEED	2707	200	388	460	92.2	242
MIN SPEED	0	0	595	15.3	1.13	237

LOAD PERFORMANCE AT BASE SPEED

	RPM	HP	TORQUE LB-FT	FUND VOLTS	FREQ-HZ	AMPS
NO LOAD	1800	0	0	460	60	70.5
1/4	1792	50.0	147	460	60	91.5
1/2	1784	100	294	460	60	131
3/4	1776	150	444	460	60	181
FULL LOAD	1766	200	595	460	60	237
O/L	1743	296	893	460	60	363

REMARKS: TYPICAL DATA

BALDOR
A MEMBER OF THE ABB GROUP

DR. BY M. ORDERS
CK. BY B. GRANT
APP. BY T. EVON
DATE 12/9/99

A-C MOTOR PERFORMANCE DATA L1642A
ISSUE DATE 12-10-09

REL S.O.	-	VOLTS	460	ENCLOSURE	DPFV	WYE CONN EQ CKT OHMS PER PHASE	
FRAME	RL2898	AMPS	237	MAX SAFE RPM	5000	(AT BASE RATING, 25 °C)	
HP	200	DUTY	CONT	IM (AMPS)	72	R1 .0208	X1 .148
BASE SPEED	1760	S.F.	1.0	P.F.@NL/FL	.052/.867	R2 .0154	X2 .153
PHASE/HERTZ	3/60	AMB °C/INSUL	40/H	WK^2 (Lb-Ft^2)	11.1		XM 3.75

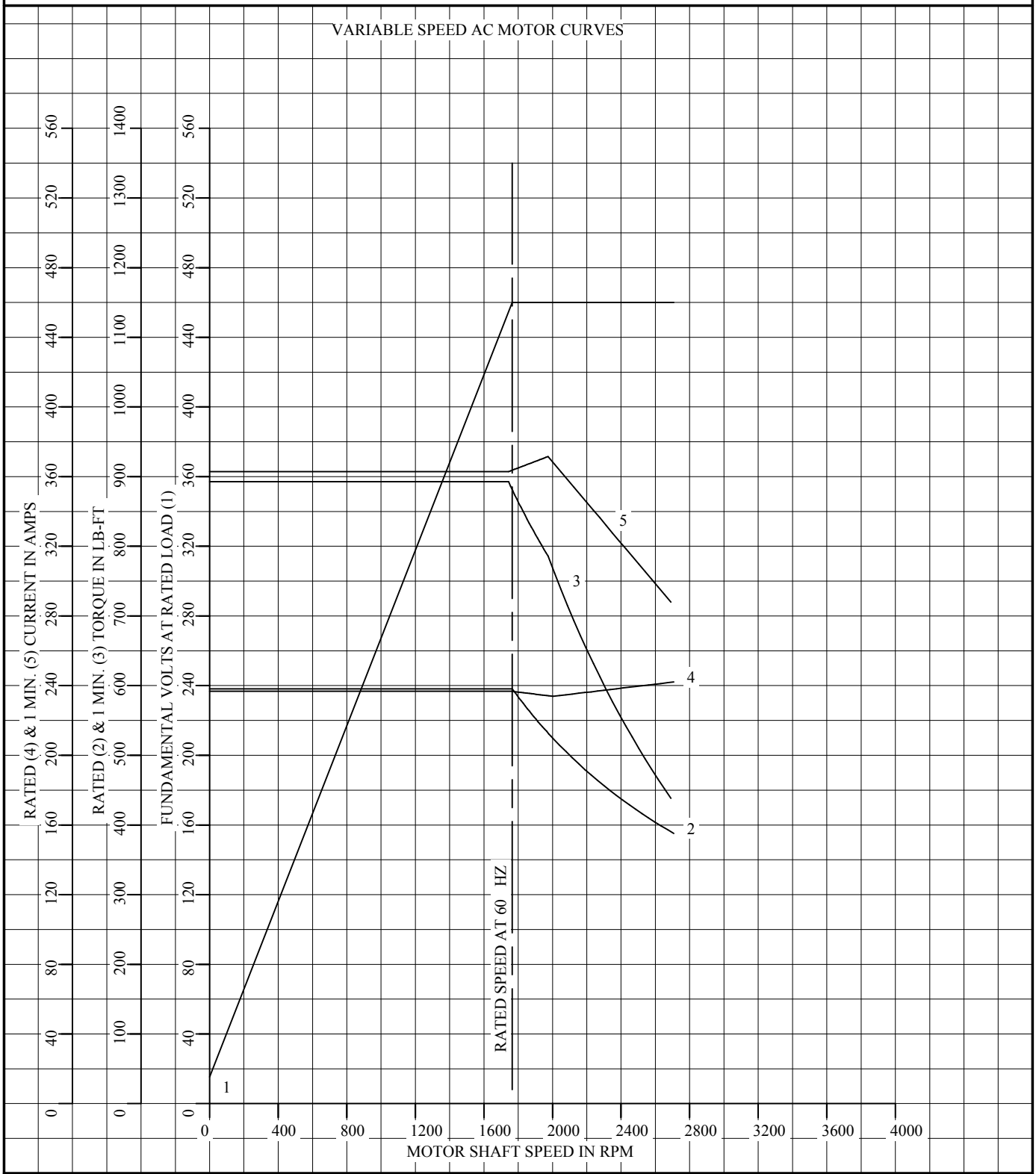

REMARKS: TYPICAL DATA
DATA VALID FOR NAMEPLATE SPEED RANGE ONLY

BALDOR
A MEMBER OF THE ABB GROUP

DR. BY	M. ORDERS
CK. BY	B. GRANT
APP. BY	T. EVON
DATE	12/9/99

A-C MOTOR PERFORMANCE CURVES

L1642A
SH 1 OF 2
ISSUE DATE 12-10-09

REL S.O.	-	VOLTS	460	ENCLOSURE	DPFV	WYE CONN EQ CKT OHMS PER PHASE (AT BASE RATING, 25 ℃)	
FRAME	RL2898	AMPS	237	MAX SAFE RPM	5000		
HP	200	DUTY	CONT	IM (AMPS)	72	R1 .0208	X1 .148
BASE SPEED	1760	S.F.	1.0	P.F.@NL/FL	.052/.867	R2 .0154	X2 .153
PHASE/HERTZ	3/60	AMB ℃/INSUL	40/H	WK^2 (Lb-Ft^2)	11.1		XM 3.75

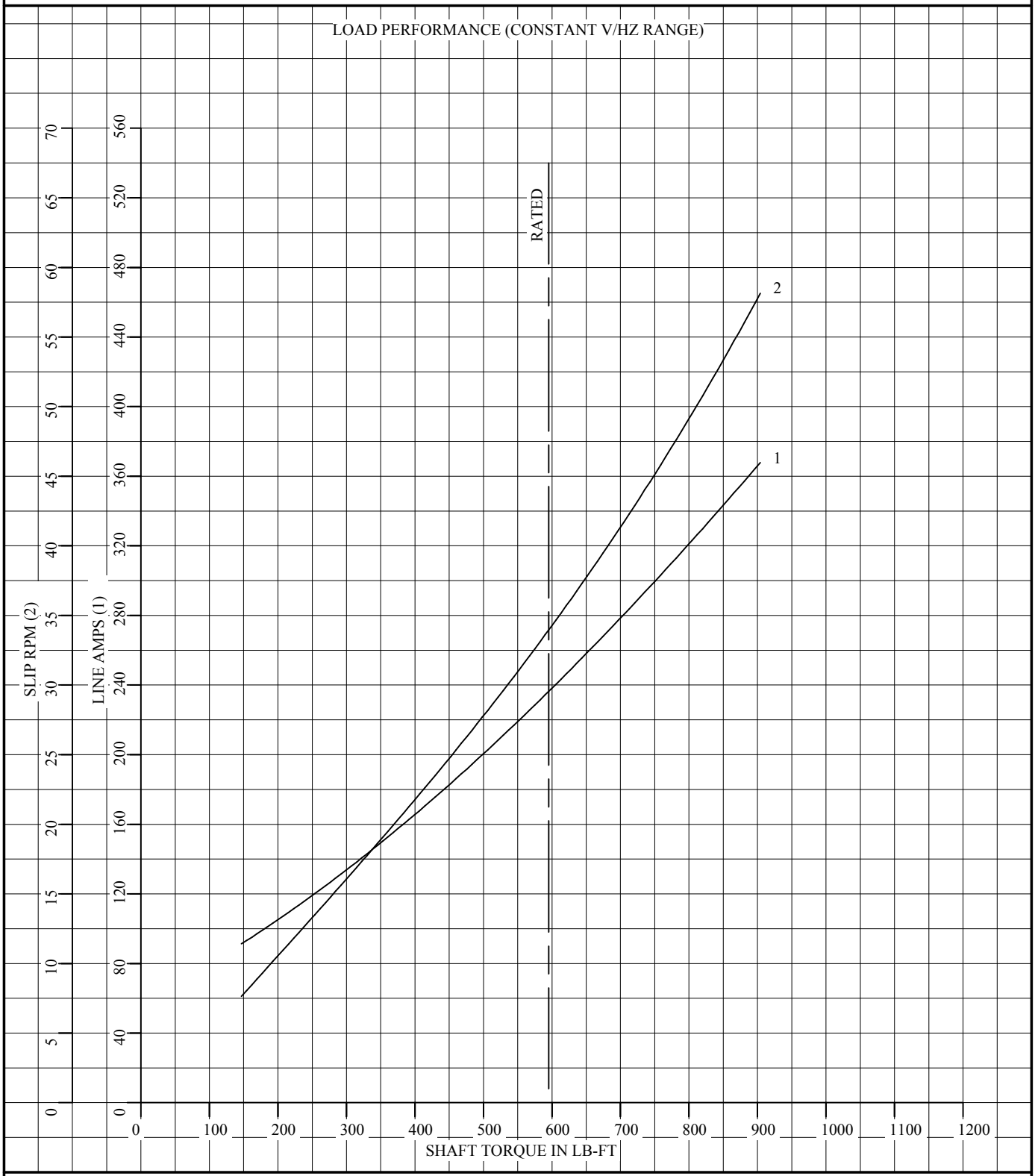

REMARKS: TYPICAL DATA
DATA VALID FOR NAMEPLATE SPEED RANGE ONLY

BALDOR
A MEMBER OF THE ABB GROUP

DR. BY	M. ORDERS
CK. BY	B. GRANT
APP. BY	T. EVON
DATE	12/9/99

A-C MOTOR PERFORMANCE CURVES

L1642A
SH 2 OF 2
ISSUE DATE 12-10-09

RPMAC VARIABLE SPEED ALTERNATING CURRENT MOTOR
RL2898Z/URL2898

617249-396

ENCLOSURE: DRIP PROOF
MOUNTING: FOOT
DRIVE METHOD: COUPLED OR BELTED

COOLING: FORCE VENTILATED
ACCESSORIES: PROVISIONS FOR TACHOMETER MOUNTING ONLY WHEN SPECIFIED

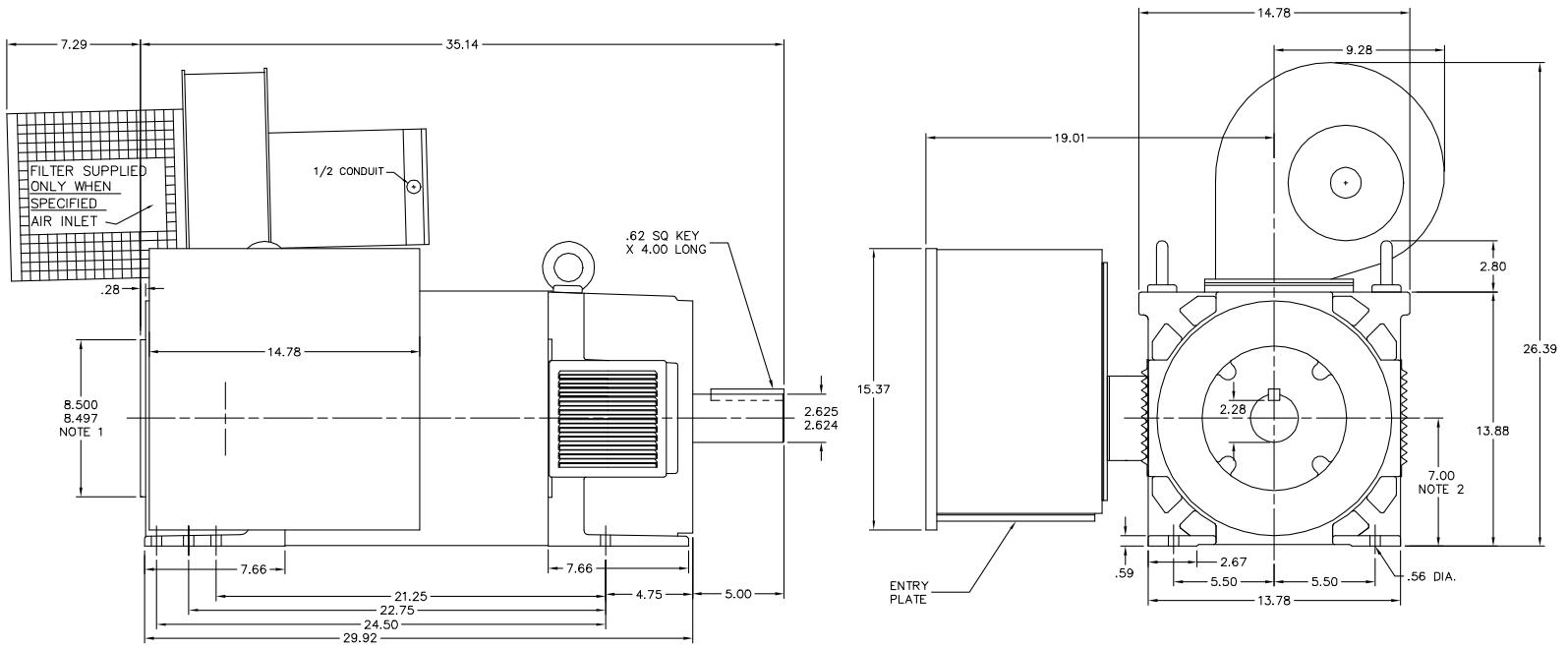

590 AMP MILL TERMINAL BOX SHOWN
ROTATABLE IN 90° INCREMENTS

DIMENSIONS ARE IN INCHES SCALE 1:1

MOTOR WEIGHT 930 LBS. (MAY VARY 15%)

NOTE 1 TACHOMETER MOUNTING
1/2–13 TAP,.88 DEEP, ON A 7.25 DIA. BOLT CIRCLE
FACE RUNOUT AND ECCENTRICITY .004 MAX. T.I.R.

NOTE 2 SHAFT HEIGHT WILL NOT BE EXCEEDED.
SHIMS UP TO .03 INCHES IN THICKNESS ARE USUALLY
REQUIRED FOR COUPLED OR GEARED MACHINES.

CUSTOMER IS RESPONSIBLE FOR DETERMINING THAT BALDOR'S PRODUCT WILL PERFORM SUITABLY IN THE INTENDED APPLICATION.

REV. DESC: ADD SPACER TO C/BOX		
REV. LTR: B	VERSION: 02	TDR: 000001198337
FILE: \RGG\00031\907	REVISED: 10:56:34 10/10/2022	BY: RGGRWM
MTL: –		

BALDOR - RELIANCE®

DIM SHT,RL2898Z,DPFV,PROV FOR TACH,FT MTG,F1 MILL BOX
SH 1 of 1

617249-396

616779-050

INDUSTRIAL ALTERNATING CURRENT MOTORS
RPM AC

STEEL, CAST IRON, MILL AND TERMINAL BOARD CONDUIT BOX DIMENSIONS

NEMA FRAMES RL210 thru RL280 and IEC FRAMES RDL132 thru RDL180
NEMA FRAMES FL180 thru FL280 and IEC FRAMES FDL112 thru FDL180

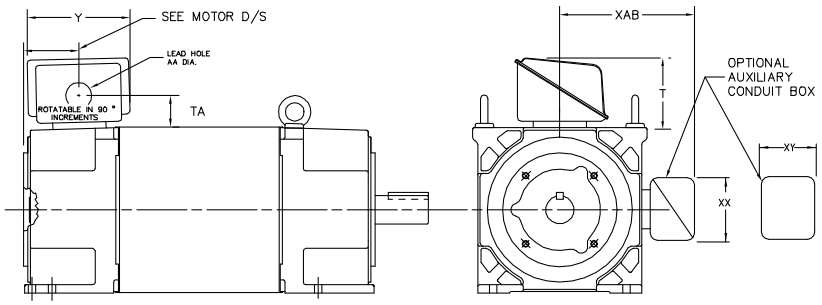

FRAME	TYPE	TERMINAL STRIP	AMPS	C/BOX	Y	TA	T	AA
FL180	STEEL	N	40	706320003A	5.00	1.62	3.00	1.12
FL180	STEEL	Y/N	75	706320005A	6.12	2.38	4.38	1.75/2.00
FL180	STEEL	N	208	706320007A	7.62	2.00	7.00	2.50/3.00
FL180	CAST IRON	Y/N	60	706320004C	5.75	2.38	4.38	1.0 TAP
FL180 & FDL11	MILL	Y	100	706310056A	7.75	2.30	4.40	PG29/PG16
FL210 & RL210	STEEL	N	61	075452000B	6.34	2.00	4.12	1.75
FL210 & RL210	STEEL	N	121	075454001AJ	7.69	2.38	5.25	1.94
FL210 & RL210	STEEL	N	305	706320016A	9.00	4.12	8.44	4.59
FL210 & RL210	CAST IRON	N	110	075460062B	7.25	2.50	5.25	1.5 TAP
FL210 & RL210 FDL13 & RDL13	MILL	Y	100	706310225R 706310056A	7.75	2.30	4.40	PG29/PG16
FL210 & RL210 FDL13 & RDL13	MILL	Y	160	706310226R 706310056B	9.00	3.06	5.40	PG36/PG16
FL210 & RL210 FDL13 & RDL13	MILL	Y/N	235	706310637A	11.42	4.00	6.72	2.50
FL250 & RL250	STEEL	N	61	075452000B	6.34	2.00	4.12	1.75
FL250 & RL250	STEEL	N	121	075454001AJ	7.69	2.38	5.25	1.94
FL250 & RL250	STEEL	N	305	706320016A	9.00	4.12	8.44	4.59
FL250 & RL250	CAST IRON	N	110	075460062B	7.25	2.50	5.25	1.5 TAP
FL250 & RL250	CAST IRON	N	210	706320013A	10.50	4.88	9.00	4.0 TAP
FL250 & RL250 FDL16 & RDL16	MILL	Y	100	706310225R 706310056A	7.75	2.30	4.40	PG29/PG16
FL250 & RL250 FDL16 & RDL16	MILL	Y	160	706310226R 706310056B	9.00	3.06	5.40	PG36/PG16
FL250 & RL250 FDL16 & RDL16	MILL	Y/N	235	706310637A	11.42	4.00	6.72	2.50
FL250 & RL250 FDL16 & RDL16	MILL	Y	400	706310063B	14.39	7.43	12.15	BLANK
FL280 & RL280	STEEL	N	160	706320009A	7.25	3.50	7.06	2.50
FL280 & RL280	STEEL	N	305	706320016A	9.00	4.12	8.44	4.59
FL280 & RL280	STEEL	N	500	702658001C	14.62	7.56	12.70	5.00
FL280 & RL280	CAST IRON	N	140	706320012B	9.25	4.81	8.56	3.0 TAP
FL280 & RL280	CAST IRON	N	210	706320013A	10.50	4.88	9.00	4.0 TAP
FL280 & RL280	CAST IRON	N	510	706320014D	15.00	7.56	12.81	5.0 TAP
FL280 & RL280 FDL18 & RDL18	MILL	Y	100	706310056A	7.75	2.30	4.40	PG29/PG16
FL280 & RL280 FDL18 & RDL18	MILL	Y	160	706310056B	9.00	3.06	5.40	PG36/PG16
FL280 & RL280 FDL18 & RDL18	MILL	Y/N	235	706310637A	11.42	4.00	6.72	2.50
FL280 & RL280 FDL18 & RDL18	MILL	Y	400	706310063B	14.39	7.43	12.15	BLANK

OPTIONAL AUXILIARY CONDUIT BOX DIMENSIONS (MAXIMUM)

FRAME SIZE	XAB	XX	XY	PART NUMBER	FRAME SIZE	XAB	XX	XY	PART NUMBER
FL210/FDL132/RL210/RDL132	7.38	4.25	4.25	602007-26-A	FL210/FDL132/RL210/RDL132	10.88	8.00	8.00	706310-3-B
FL250/FDL160/RL250/RDL160	8.44	4.25	4.25	602007-26-A	FL250/FDL160/RL250/RDL160	11.88	8.00	8.00	706310-3-B
FL280/FDL180/RL280/RDL180	9.12	4.25	4.25	602007-26-A	FL280/FDL180/RL280/RDL180	12.62	8.00	8.00	706310-3-B

(1) 'AA' CONDUIT.
(2) 'AA' PIPE TAP.
(3) CUSTOMER TO PROVIDE HOLE FOR CONDUIT.
(4) 2" DN -5A or 1" TAP DN -4C

TERMINAL BOX CAN BE ROTATED FOR LEAD OUTLET AT TOP, SIDES OR BOTTOM. TERMINAL BOX LOCATED ON OPPOSITE SIDE WHEN F-2, W-1, W-4, W-5, W-7, OR C-1 MOUNTING IS SPECIFIED. BOX LOCATED ON TOP WHEN SPECIFIED.

CUSTOMER IS RESPONSIBLE FOR DETERMINING THAT BALDOR'S PRODUCT WILL PERFORM SUITABLY IN THE INTENDED APPLICATION.

BALDOR - RELIANCE®

REV. DESC: ADD 706310-637 & 639 BOX | TDR: 000001180260
REV. LTR: F | VERSION: 06
FILE: \RGV\00003\692 | REVISED: 11:08:56 10/26/2021 | BY: RGGRWM
MTL: - | DIM SHT NEMA RL210-RL280 FL180-FL280 IEC RDL132-RDL180 SH 1 of 1

616779-050

422927–001

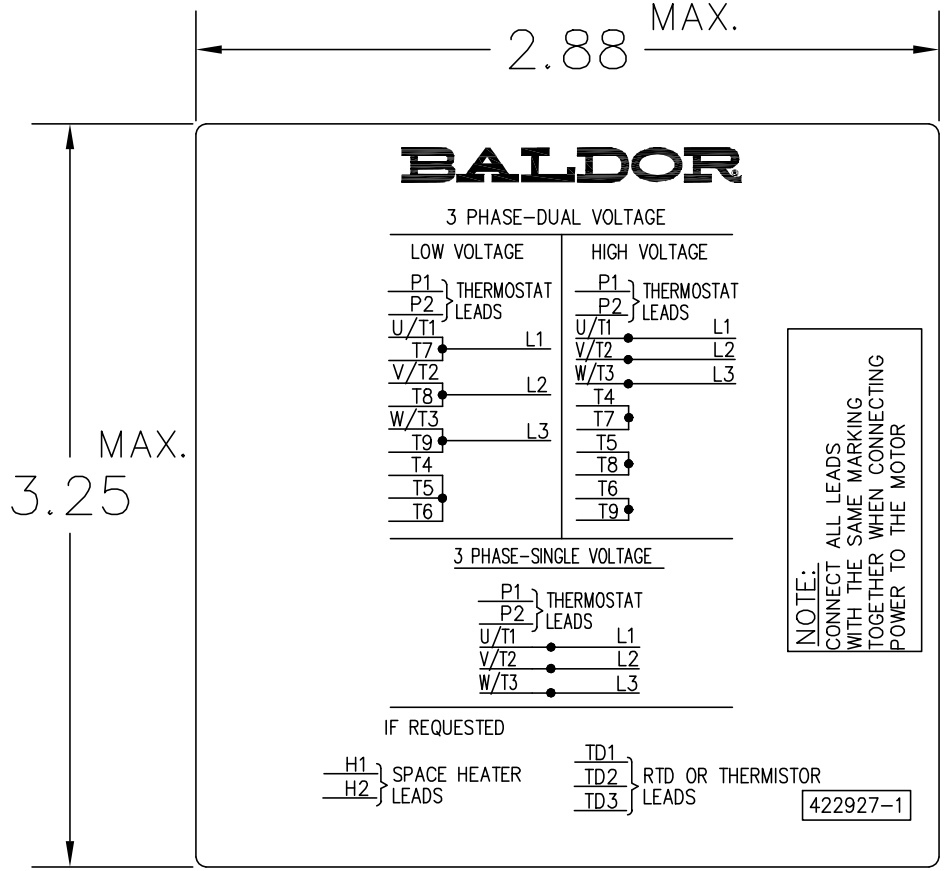

NOTE:
DATA TO BE SIZED SO THAT IT FITS INTO MATERIAL DECAL DIMENSIONS. MAKE LETTERS & NUMBERS AS LARGE AS POSIBLE.

MATERIAL: CERAMATIC DGF–P4
PERMA GRIP ADHESIVE

ALL LETTERS, NUMBERS AND LINES TO BE BLACK ON WHITE BACKGROUND.

422927–001

REV. DESC: CHANGE BACKGROUND COLOR FROM GOLD TO WHITE			BALDOR
REV. LTR: B	VERSION: 02	TDR: 000000788708	
FILE: \RGG\00000\203		REVISED: 08:09:29 03/04/2013	EXTERNAL CONNECTION LABEL
MTL: –		BY: RGGWT	SH 1 of 1