ABB BALDOR RELIANCE

Customer information packet

IDBRPM321254

125HP, 1780RPM, 3PH, N/AHZ, L3203, TEBC, FOOT,

Copyright © All product information within this document is subject to ABB Motors and Mechanical Inc. copyright © protection, unless otherwise noted.
11/28/2026 8:29:26 AM

Specifications

Enclosure	TEBC
Frame	L3203
Frame Material	Exposed Laminations
Frequency	60.00 Hz
Output @ Frequency	125.000 HP @ 60 HZ
Phase	3
Synchronous Speed @ Frequency	1800 RPM @ 60 HZ
Voltage @ Frequency	460.0 V @ 60 HZ
Agency Approvals	CCSA US
Auxiliary Box	NO AUXILLARY BOX
Base Indicator	Rigid
Bearing Grease Type	Polyrex EM (-20F +300F)
Current @ Voltage	150.000 A @ 460.0 V
Duty Rating	CONT
Feedback Device	NO FEEDBACK
Frame Prefix	L
Heater Indicator	No Heater
High Voltage Full Load Amps	150.0 a
Insulation Class	H
Motor Standards	NEMA
Mounting Arrangement	F3
Overall Length	45.94 IN
Product Family	General Industrial
Pulley End Bearing Type	Ball
Pulley Face Code	Standard
Service Factor	1.00
Shaft Diameter	2.874 IN
Shaft Ground Indicator	No Shaft Grounding
Shaft Rotation	Reversible
Speed	1780 rpm
Thermal Device - Bearing	None
Thermal Device - Winding	Normally Closed Thermostat

Part Detail

Revision	A
Type	AC
Mech. spec.	
Base	
Status	INA/A
Elec. spec.	L1656A
Layout	616763-001
Eff. date	09-25-2018
CD Diagram	422927-001
Poles	04
Leads	
Proprietary	False
Created date	04-10-2015

Nameplate

000613006NS

DUTY	HP	RPM	AMPS	VOLTS	HZ
CONT	125	1780	150	460	60
CONT	125	3560	141	460	120

CAT.NO.	IDBRPM321254	**SPEC. NO.**	P32L0230				
SER.NO		**FR**	L 3203	**INSUL**	H		
PH.	3	**MAX SAFE SPEED**	4000	**AMB.**	40	**MIN. AMB.**	-25
DESIGN NO.	L1656A	**TYPE**		**ENCL.**	TEAO-BC		
S.F.	1.0	**D.E. BRG.**	85BC02J30X				
ENCL MOD		**O.D.E. BRG.**	65BC02J30X				

REL S.O.	-	VOLTS	460	ENCLOSURE	TEBC	WYE CONN EQ CKT OHMS PER PHASE			
FRAME	L3203	AMPS	150	MAX SAFE RPM	4000	(AT BASE RATING, 25 ℃)			
HP	125	DUTY	CONT	IM (AMPS)	67	R1	.0169	X1	.126
BASE SPEED	1780	S.F.	1.0	P.F.@NL/FL	.037/.84	R2	.0140	X2	.165
PHASE/HERTZ	3/60	AMB ℃/INSUL	40/H	WK^2 ($Lb\text{-}Ft^2$)	21.3			XM	3.97

RATED FULL LOAD DATA

	RPM	HP	TORQUE LB-FT	FUND VOLTS	FREQ-HZ	AMPS
BASE SPEED	1782	125	368	460	60	150
MAX SPEED	3562	125	184	460	120	141
MIN SPEED	0	0	0	7.60	.587	150

LOAD PERFORMANCE AT BASE SPEED

	RPM	HP	TORQUE LB-FT	FUND VOLTS	FREQ-HZ	AMPS
NO LOAD	1800	0	0	460	60	65.2
1/4	1796	31.3	91	460	60	74.9
1/2	1791	62.5	183	460	60	94.7
3/4	1787	93.7	275	460	60	121
FULL LOAD	1782	125	368	460	60	150
O/L	1773	187	553	460	60	213

BLOWER DATA	VOLTS	PH/HZ	FL AMPS	LR AMPS	FRAME	CFM

REMARKS: TYPICAL DATA
CORRELATED DATA

BALDOR · DODGE · RELIANCE

DR. BY M. ORDERS
CK. BY B. GRANT
APP. BY T. EVON
DATE 12/20/99

A-C MOTOR PERFORMANCE DATA L1656A
ISSUE DATE 12/20/99

ABB BALDOR RELIANCE

CUSTOMER INFORMATION PACKET IDBRPM321254 - 125HP, 1780RPM, 3PH, N/AHZ, L3203, TEBC, FOOT,

REL S.O.	-	VOLTS	460	ENCLOSURE	TEBC	WYE CONN EQ CKT OHMS PER PHASE	
FRAME	L3203	AMPS	150	MAX SAFE RPM	4000	(AT BASE RATING, 25 ℃)	
HP	125	DUTY	CONT	IM (AMPS)	67	R1 .0169	X1 .126
BASE SPEED	1780	S.F.	1.0	P.F.@NL/FL	.037/.84	R2 .0140	X2 .165
PHASE/HERTZ	3/60	AMB ℃/INSUL	40/H	WK^2 (Lb-Ft^2)	21.3		XM 3.97

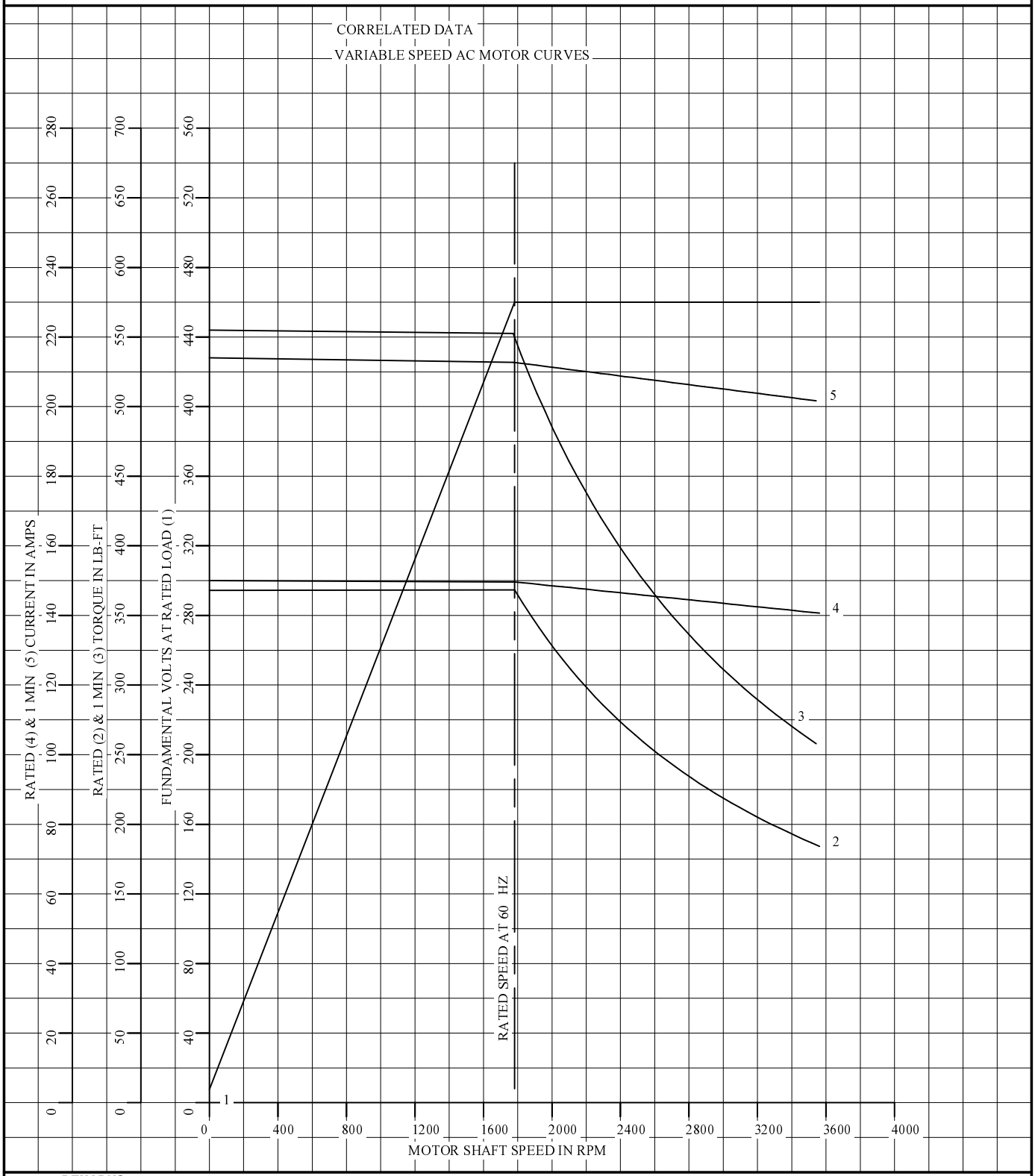

REMARKS: TYPICAL DATA
DATA VALID FOR NAMEPLATE SPEED RANGE ONLY

BALDOR · DODGE · RELIANCE

DR. BY M. ORDERS
CK. BY B. GRANT
APP. BY T. EVON
DATE 12/20/99

A-C MOTOR PERFORMANCE CURVES

L1656A
SH 1 OF 2
ISSUE DATE 12/20/99

REL S.O.	-	VOLTS	460	ENCLOSURE	TEBC	WYE CONN EQ CKT OHMS PER PHASE (AT BASE RATING, 25 ℃)	
FRAME	L3203	AMPS	150	MAX SAFE RPM	4000		
HP	125	DUTY	CONT	IM (AMPS)	67	R1 .0169	X1 .126
BASE SPEED	1780	S.F.	1.0	P.F.@NL/FL	.037/.84	R2 .0140	X2 .165
PHASE/HERTZ	3/60	AMB ℃/INSUL	40/H	WK^2 (Lb-Ft^2)	21.3		XM 3.97

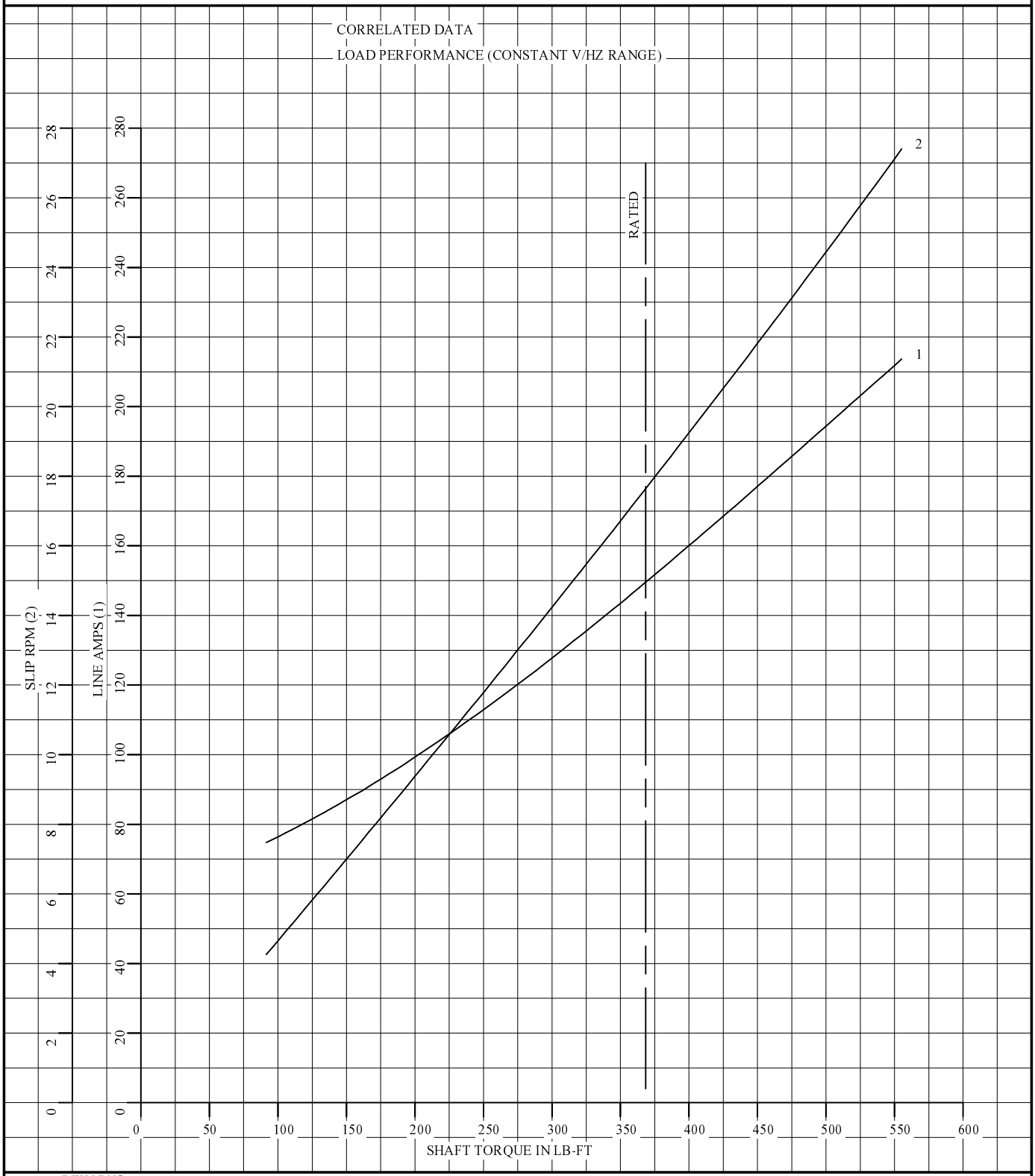

REMARKS: TYPICAL DATA
DATA VALID FOR NAMEPLATE SPEED RANGE ONLY

BALDOR · DODGE · RELIANCE

DR. BY	M. ORDERS
CK. BY	B. GRANT
APP. BY	T. EVON
DATE	12/20/99

A-C MOTOR PERFORMANCE CURVES

L1656A
SH 2 OF 2
ISSUE DATE 12/20/99

616763-001

VARIABLE SPEED ALTERNATING CURRENT MOTORS
RPM AC

ENCLOSURE: TOTALLY ENCLOSED
MOUNTING: FOOT
DRIVE METHOD: COUPLED OR BELTED

COOLING: BLOWER COOLED
ACCESSORIES: AIR-OVER INLINE PROVISIONS FOR TACHOMETER MOUNTING ONLY WHEN SPECIFIED

FRAMES L3203Z THRU UL3213Z

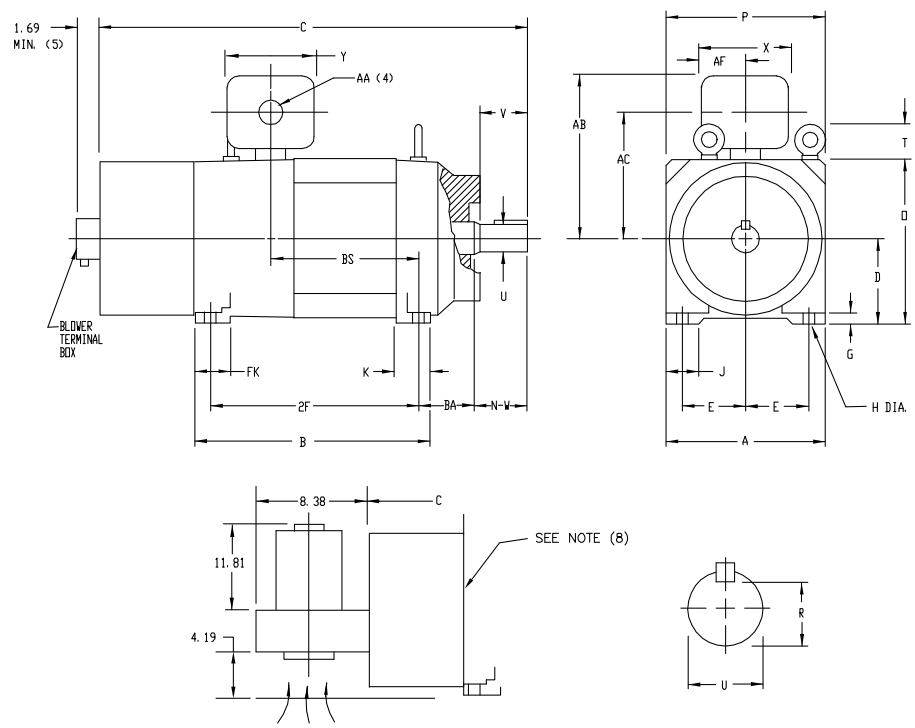

DIMENSIONS ARE IN INCHES

FRAME	A	D(1)	E	G	H	J	O	P	T	BA	K	FK
L3203Z THRU UL3213Z	15.50	8.00	6.25	.88	.69	3.00	15.81	15.62	3.06	5.25	3.25	8.00

FRAME	C (6)	B	BS	2F	DRIVE END SHAFT AND KEY						WT. LBS.
					N-W	U(2)	V	R(3)	SQ.	LGTH.	
UL&L3203Z	44.25	27.75	20.94	25.75	5.75	2.875	5.50	2.450	.750	4.25	1170
UL&L3213Z	46.75	30.25	23.44	28.25	5.75	2.875	5.50	2.450	.750	4.25	1310

(1) 'D' DIMENSION WILL NOT BE EXCEEDED. SHIMS UP TO .03 INCHES IN THICKNESS ARE USUALLY REQUIRED FOR COUPLED OR GEARED MACHINES.
(2) 'U' VARIES -- +.000 -.001
(3) 'R' VARIES -- +.000 -.015
(4) FOR TERMINAL BOX DIMENSIONS 'AA','AB', 'AC','AF','X' AND'Y' REFER TO BOX D/S 616779-1
(5) WALLS OR OBSTRUCTIONS MUST NOT ENCROACH ON AIR INLET SPACE.
(6) 'C' DIMENSION IS OVERALL LENGTH WITH OR W/OUT THE FEEDBACK DEVICES SHOWN ON DS 616779-10 FOR TEAO-BC.
(7) REFER TO DS 616779-10 (TEAO-BC) FOR TACH CONNECTION DIMENSIONS.
(8) DIMENSIONS FOR 'XT' FEATURES OR CENTRIFUGAL BLOWER ONLY.

TERMINAL BOX CAN BE ROTATED IN 90 DEG. INCREMENTS.
TERMINAL BOX MOUNTED ON TOP AS STANDARD.
TERMINAL BOX CAN BE LOCATED ON SIDE IN F1 OR F2 POSITION WHEN SPECIFIED.
MOTOR WEIGHT MAY VARY 15% FOR NON-STANDARD RATINGS AND/OR ACCESSORIES.
IF MOUNTING CLEARANCE DETAILS ARE REQUIRED, CONSULT FACTORY.

FRAME PREFIX UL = ROLLER BEARING
FRAME PREFIX L = BALL BEARINGS

616763-001

CUSTOMER IS RESPONSIBLE FOR DETERMINING THAT BALDOR'S PRODUCT WILL PERFORM SUITABLY IN THE INTENDED APPLICATION.

BALDOR

DIM SHT L3203Z THRU UL3213Z RPM AC TEBC AO INLINE FT MTG
SH 1 of 1

REV. DESC: ADD NOTE: CENTRIFUGAL STYLE BLOWERS
REV. LTR: A | VERSION: 01 | TDR: 000000740277
FILE: \RGG\00003\683 | REVISED: 04:09:59 03/29/2012 | BY: RGGTB1
MTL: -

616779-001

RPM AC INDUSTRIAL ALTERNATING CURRENT MOTORS

STEEL, CAST IRON, MILL AND TERMINAL BOARD CONDUIT BOX DIMENSIONS

NEMA FRAMES L180 thru L440 and IEC FRAMES DL112 thru DL280

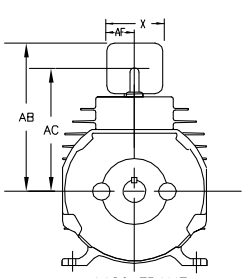

L180 FRAME
TERMINAL BOX ONLY AVAILABLE ON TOP

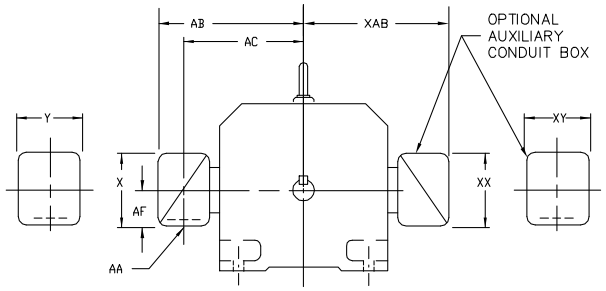

L210 THRU L440

DIMENSIONS ARE IN INCHES (mm)

STEEL TERMINAL BOX DIMENSIONS (MAXIMUM)

FRAME SIZE	MAX. AMPS	STANDARD SIZE AA(1)	AB	AC	AF	X	Y	PART NUMBER
L180	40	1.38	8.62	6.94	2.25	4.50	5.00	706320-3-A
L180	75	2	9.38	7.50	2.81	5.62	6.12	706320-5-A
L210	160	2	12.75	9.19	4.25	8.44	7.25	706320-9-A & D
L210	305	4	14.62	10.50	5.38	10.56	9.00	706320-16-A & D
L210	500	5	18.38	13.25	6.50	12.10	14.62	702658-1-C
L250	160	2	13.75	10.25	4.25	8.44	7.25	706320-9-A & D
L250	305	4	15.75	11.56	5.38	10.56	9.00	706320-16-A & D
L250	500	5	19.50	14.31	6.50	12.10	14.62	702658-1-C
L280	160	2	14.00	10.44	4.25	8.44	7.25	706320-9-A & D
L280	305	4	15.88	11.75	5.38	10.56	9.00	706320-16-A & D
L280	500	5	19.62	14.50	6.50	12.10	14.62	702658-1-C
L320	160	2	15.38	11.81	4.25	8.44	7.25	706320-9-A & D
L320	305	4	17.25	13.12	5.38	10.56	9.00	706320-16-A & D
L320	500	5	21.00	15.88	6.50	12.10	14.62	702658-1-C
L360	160	2	16.38	12.81	4.25	8.44	7.25	706320-9-A & D
L360	305	4	18.25	14.12	5.38	10.56	9.00	706320-16-A & D
L360	500	5	22.00	16.88	6.50	12.10	14.62	702658-1-C

CAST IRON TERMINAL BOX DIMENSIONS (MAXIMUM)

FRAME SIZE	MAX. AMPS	STANDARD SIZE AA(2)	AB	AC	AF	X	Y	PART NUMBER
L180	60	1	9.38	7.50	2.50	5.00	5.75	706320-4-C
L210	140	3	14.25	10.50	3.62	8.00	9.25	706320-12-B
L210	210	4	15.62	11.38	4.12	9.50	10.50	706320-13-A
L210	510	5	18.50	13.25	7.00	12.75	15.00	706320-14-D
L250	140	3	15.38	11.50	3.62	8.00	9.25	706320-12-B
L250	210	4	16.62	12.44	4.12	9.50	10.50	706320-13-A
L250	510	5	19.62	14.31	7.00	12.75	15.00	706320-14-D
L280	140	3	15.50	11.75	3.62	8.00	9.25	706320-12-B
L280	210	4	16.88	12.62	4.12	9.50	10.50	706320-13-A
L280	510	5	19.75	14.50	7.00	12.75	15.00	706320-14-D
L320	140	3	15.75	12.00	3.62	8.00	9.25	706320-12-B
L320	210	4	17.12	12.88	4.12	9.50	10.50	706320-13-A
L320	510	5	21.12	15.88	7.00	12.75	15.00	706320-14-D
L360	140	3	16.75	13.00	3.62	8.00	9.25	706320-12-B
L360	210	4	18.12	13.88	4.12	9.50	10.50	706320-13-A
L360	510	5	22.12	16.88	7.00	12.75	15.00	706320-14-D

MILL CONDUIT BOX DIMENSIONS (MAXIMUM)

FRAME SIZE	AMPS	AA	AB	AC	AF	X	Y	PART NUMBER
L210	160	(3)	10.78	8.41	3.50	8.00	8.00	706310-3-X or Y
L250	160	(3)	11.84	9.47	3.50	8.00	8.00	706310-3-X or Y
L280	160	(3)	12.75	10.75	3.50	8.00	8.00	706310-3-X or Y
	590	(3)	14.75	11.34	4.50	16.00	16.00	706310-3-R
L320	590	(3)	15.47	12.06	4.50	16.00	16.00	706310-3-R
L360	590	(3)	16.47	13.06	4.50	16.00	16.00	706310-3-R
L400	590	(3)	18.00	15.00	4.50	16.00	16.00	706310-3-R
L440	1260	(3)	27.38	19.88	6.06	18.50	18.50	706310-63-E

IEC CONDUIT BOX DIMENSIONS WITH TERMINAL BOARDS (MAXIMUM)

FRAME NEMA/IEC	AMPS	AA	AB (mm)	AC (mm)	AF (mm)	X (mm)	Y (mm)	PART NUMBER	PART NUMBER
L180/DL112	85	(4)	9.38(239)	7.50 (191)	2.81 (72)	5.62 (143)	6.12 (156)	706320-5-A or 4-C	706320-5-A or 4-C
L210/DL132	100	--	10.77 (274)	9.04 (230)	3.74 (95)	7.48 (190)	7.48 (190)	706310-56-A	706310-225-R
	160	--	11.63 (296)	9.62 (245)	4.41 (112)	8.82 (224)	8.82 (224)	706310-56-B	706310-226-R
L250/DL160	100	--	12.09 (307)	10.36 (264)	3.74 (95)	7.48 (190)	7.48 (190)	706310-56-A	706310-225-R
	160	--	12.95 (329)	10.94 (278)	4.41 (112)	8.82 (224)	8.82 (224)	706310-56-B	706310-226-R
L280/DL180	160	--	13.58 (345)	11.57 (294)	4.41(112)	8.82 (224)	8.82 (224)	706310-56-B	706310-226-R
	400	--	19.09 (485)	14.37 (365)	6.20 (158)	14.39 (366)	14.39 (366)	706310-63-B	706310-63-B
L320/DL200	800	--	20.06 (510)	17.53 (446)	6.20 (158)	14.39 (366)	14.39 (366)	706310-63-B	706310-63-B
L360/DL225	800	--	20.78 (528)	18.25 (464)	6.20 (158)	14.39 (366)	14.39 (366)	706310-63-B	706310-63-B
L400/DL250	800	--	21.75 (553)	19.25 (489)	6.20 (158)	14.39 (366)	14.39 (366)	706310-63-B	706310-63-B
L400/DL250	1260	--	25.94 (659)	18.44 (468)	6.06 (154)	18.50 (470)	18.50 (470)	706310-63-E	706310-63-E
L440/DL280	1260	--	27.38 (696)	19.88 (505)	6.06 (154)	18.50 (470)	18.50 (470)	706310-63-E	706310-63-E
L440/DL280	1300	--	30.38 (772)	21.38 (543)	12.44 (316)	24.00 (610)	24.00 (610)	706310-360-A	706310-360-A

OPTIONAL AUXILIARY CONDUIT BOX DIMENSIONS (MAXIMUM)

FRAME SIZE	XAB	XX	XY	PART NUMBER	FRAME SIZE	XAB	XX	XY	PART NUMBER
L210/DL132	7.38	4.25	4.25	602007-26-A	L210/DL132	10.88	8.00	8.00	706310-3-B
L250/DL160	8.44	4.25	4.25	602007-26-A	L250/DL160	11.88	8.00	8.00	706310-3-B
L280/DL180	9.12	4.25	4.25	602007-26-A	L280/DL180	12.62	8.00	8.00	706310-3-B
L320/DL200	10.00	4.25	4.25	602007-26-A	L320/DL200	13.50	8.00	8.00	706310-3-B
L360/DL225	11.00	4.25	4.25	602007-26-A	L360/DL225	14.50	8.00	8.00	706310-3-B
L400/DL250	12.00	4.25	4.25	602007-26-A	L400/DL250	15.50	8.00	8.00	706310-3-B
L440/DL280	13.12	4.25	4.25	602007-26-A	L440/DL280	16.62	8.00	8.00	706310-3-B

(1) "AA" CONDUIT.
(2) "AA" PIPE TAP.
(3) CUSTOMER TO PROVIDE HOLE FOR CONDUIT.
(4) 2" DN -5A or 1" TAP DN -4C

CONDUIT BOX CAN BE ROTATED 360°. CONDUIT BOX MAY BE LOCATED F1,F2 OR F3 AS SPECIFIED

CUSTOMER IS RESPONSIBLE FOR DETERMINING THAT BALDOR'S PRODUCT WILL PERFORM SUITABLY IN THE INTENDED APPLICATION.

REV. DESC: ADD 1260 AMP L400, ADD 1300 AMP L440
REV. LTR: A
FILE: \RGV\00003\688
MTL: -

VERSION: 01
REVISED: 10:23:58 06/18/2013

TDR: 000000804459
BY: RGGWT

BALDOR

DIM SHT NEMA L180 THRU L440 & IEC DL112 THRU DL280
SH 1 of 1

616779-001

422927–001

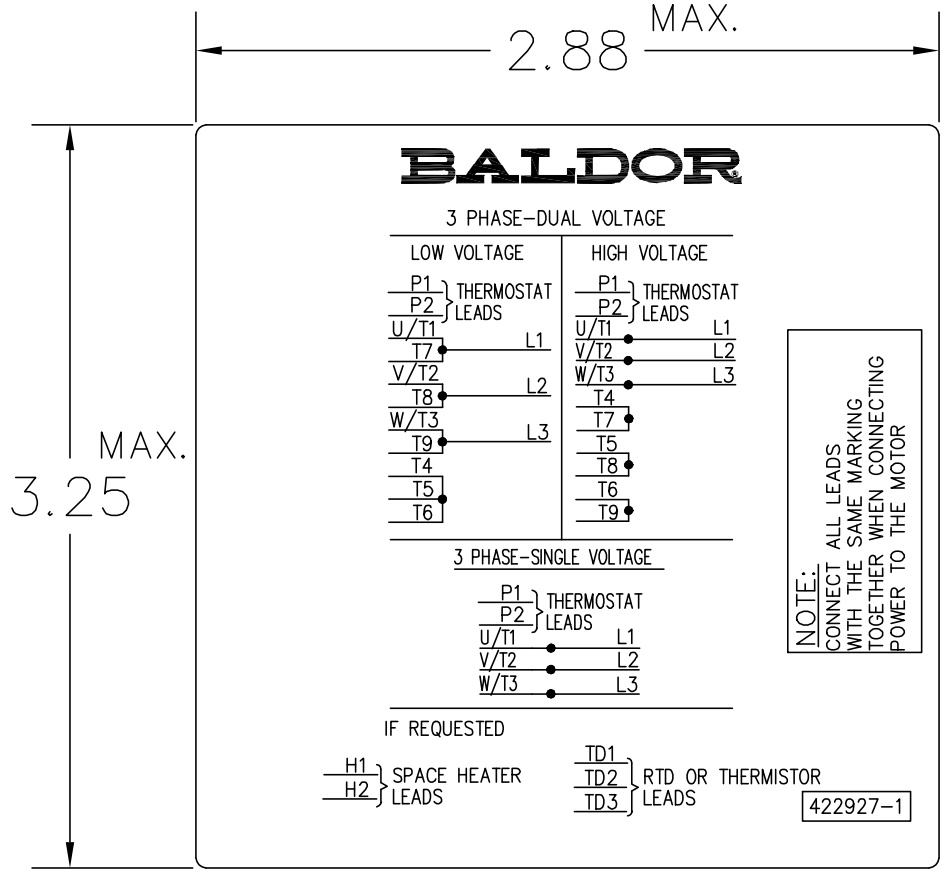

NOTE:
DATA TO BE SIZED SO THAT IT FITS INTO MATERIAL DECAL DIMENSIONS. MAKE LETTERS & NUMBERS AS LARGE AS POSIBLE.

MATERIAL: CERAMATIC DGF–P4 PERMA GRIP ADHESIVE

ALL LETTERS, NUMBERS AND LINES TO BE BLACK ON WHITE BACKGROUND.

422927–001

REV. DESC: CHANGE BACKGROUND COLOR FROM GOLD TO WHITE		
REV. LTR: B	VERSION: 02	TDR: 000000788708
FILE: \RGG\00000\203		REVISED: 08:09:29 03/04/2013
MTL: –		BY: RGGWT

BALDOR
EXTERNAL CONNECTION LABEL
SH 1 of 1