INDUSTRIAL ALTERNATING CURRENT MOTORS
RPM AC

STEEL, CAST IRON, MILL AND TERMINAL BOARD CONDUIT BOX DIMENSIONS

NEMA FRAMES RL210 thru RL280 and IEC FRAMES RDL132 thru RDL180
NEMA FRAMES FL180 thru FL280 and IEC FRAMES FDL112 thru FDL180

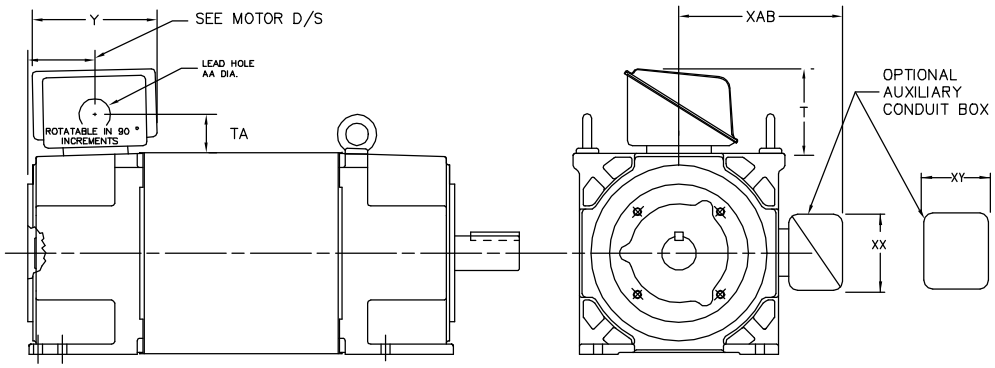

FRAME	TYPE	TERMINAL STRIP	AMPS	C/BOX	Y	TA	T	AA
FL180	STEEL	N	40	706320003A	5.00	1.62	3.00	1.12
FL180	STEEL	Y/N	75	706320005A	6.12	2.38	4.38	1.75/2.00
FL180	STEEL	N	208	706320007A	7.62	2.00	7.00	2.50/3.00
FL180	CAST IRON	Y/N	60	706320004C	5.75	2.38	4.38	1.0 TAP
FL180 & FDL11	MILL	Y	100	706310056A	7.75	2.30	4.40	PG29/PG16
FL210 & RL210	STEEL	N	61	075452000B	6.34	2.00	4.12	1.75
FL210 & RL210	STEEL	N	121	075454001AJ	7.69	2.38	5.25	1.94
FL210 & RL210	STEEL	N	305	706320016A	9.00	4.12	8.44	4.59
FL210 & RL210	CAST IRON	N	110	075460062B	7.25	2.50	5.25	1.5 TAP
FL210 & RL210 FDL13 & RDL13	MILL	Y	100	706310225R 706310056A	7.75	2.30	4.40	PG29/PG16
FL210 & RL210 FDL13 & RDL13	MILL	Y	160	706310226R 706310056B	9.00	3.06	5.40	PG36/PG16
FL210 & RL210 FDL13 & RDL13	MILL	Y/N	235	706310637A	11.42	4.00	6.72	2.50
FL250 & RL250	STEEL	N	61	075452000B	6.34	2.00	4.12	1.75
FL250 & RL250	STEEL	N	121	075454001AJ	7.69	2.38	5.25	1.94
FL250 & RL250	STEEL	N	305	706320016A	9.00	4.12	8.44	4.59
FL250 & RL250	CAST IRON	N	110	075460062B	7.25	2.50	5.25	1.5 TAP
FL250 & RL250	CAST IRON	N	210	706320013A	10.50	4.88	9.00	4.0 TAP
FL250 & RL250 FDL16 & RDL16	MILL	Y	100	706310225R 706310056A	7.75	2.30	4.40	PG29/PG16
FL250 & RL250 FDL16 & RDL16	MILL	Y	160	706310226R 706310056B	9.00	3.06	5.40	PG36/PG16
FL250 & RL250 FDL16 & RDL16	MILL	Y/N	235	706310637A	11.42	4.00	6.72	2.50
FL250 & RL250 FDL16 & RDL16	MILL	Y	400	706310063B	14.39	7.43	12.15	BLANK
FL280 & RL280	STEEL	N	160	706320009A	7.25	3.50	7.06	2.50
FL280 & RL280	STEEL	N	305	706320016A	9.00	4.12	8.44	4.59
FL280 & RL280	STEEL	N	500	702658001C	14.62	7.56	12.70	5.00
FL280 & RL280	CAST IRON	N	140	706320012B	9.25	4.81	8.56	3.0 TAP
FL280 & RL280	CAST IRON	N	210	706320013A	10.50	4.88	9.00	4.0 TAP
FL280 & RL280	CAST IRON	N	510	706320014D	15.00	7.56	12.81	5.0 TAP
FL280 & RL280 FDL18 & RDL18	MILL	Y	100	706310056A	7.75	2.30	4.40	PG29/PG16
FL280 & RL280 FDL18 & RDL18	MILL	Y	160	706310056B	9.00	3.06	5.40	PG36/PG16
FL280 & RL280 FDL18 & RDL18	MILL	Y/N	235	706310637A	11.42	4.00	6.72	2.50
FL280 & RL280 FDL18 & RDL18	MILL	Y	400	706310063B	14.39	7.43	12.15	BLANK

OPTIONAL AUXILIARY CONDUIT BOX DIMENSIONS (MAXIMUM)

FRAME SIZE	XAB	XX	XY	PART NUMBER	FRAME SIZE	XAB	XX	XY	PART NUMBER
FL210/FDL132/RL210/RDL132	7.38	4.25	4.25	602007-26-A	FL210/FDL132/RL210/RDL132	10.88	8.00	8.00	706310-3-B
FL250/FDL160/RL250/RDL160	8.44	4.25	4.25	602007-26-A	FL250/FDL160/RL250/RDL160	11.88	8.00	8.00	706310-3-B
FL280/FDL180/RL280/RDL180	9.12	4.25	4.25	602007-26-A	FL280/FDL180/RL280/RDL180	12.62	8.00	8.00	706310-3-B

(1) 'AA' CONDUIT.
(2) 'AA' PIPE TAP.
(3) CUSTOMER TO PROVIDE HOLE FOR CONDUIT.
(4) 2' DN -5A or 1' TAP DN -4C

TERMINAL BOX CAN BE ROTATED FOR LEAD OUTLET AT TOP, SIDES OR BOTTOM. TERMINAL BOX LOCATED ON OPPOSITE SIDE WHEN F-2, W-1, W-4, W-5, W-7, OR C-1 MOUNTING IS SPECIFIED. BOX LOCATED ON TOP WHEN SPECIFIED.

CUSTOMER IS RESPONSIBLE FOR DETERMINING THAT BALDOR'S PRODUCT WILL PERFORM SUITABLY IN THE INTENDED APPLICATION.

BALDOR - RELIANCE®

DIM SHT NEMA RL210-RL280 FL180-FL280 IEC RDL132-RDL180
SH 1 of 1

REV. DESC: ADD 706310-637 & 639 BOX
REV. LTR: F
VERSION: 06
TDR: 000001180260
FILE: \RGG\00003\692
REVISED: 11:08:56 10/26/2021
BY: RGGRWM
MTL: -