HD130LYA001

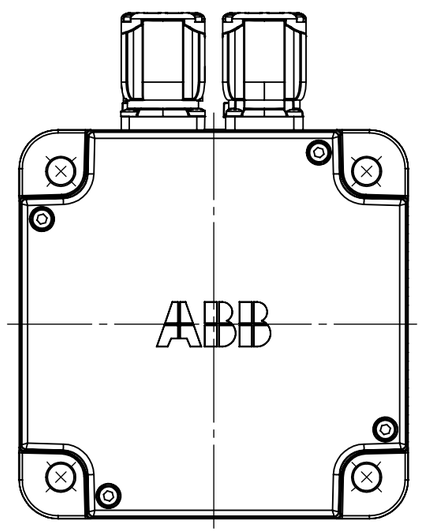

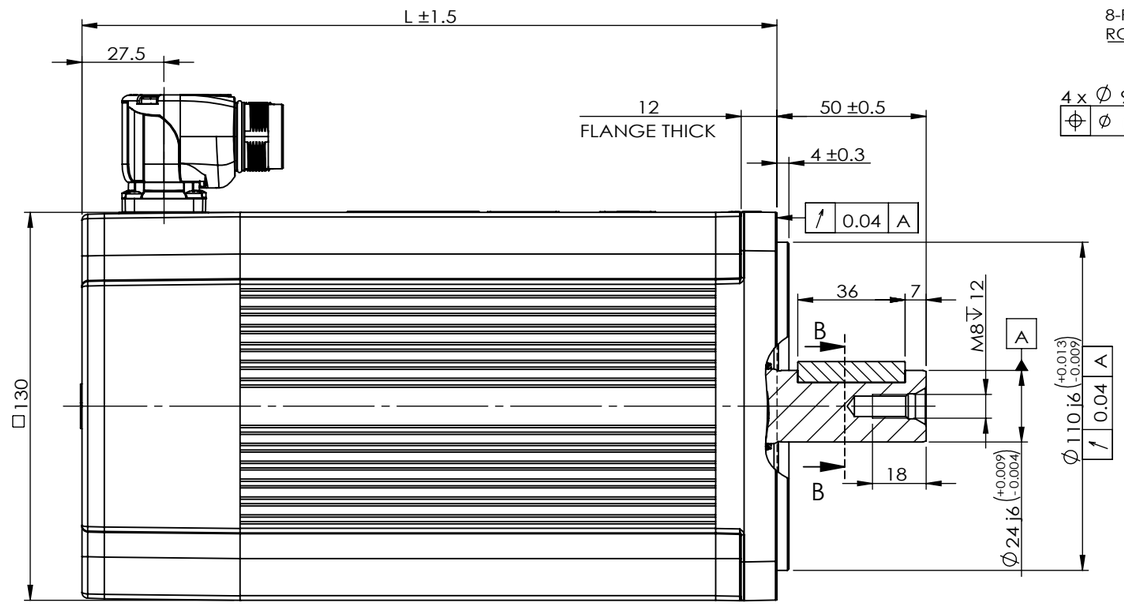

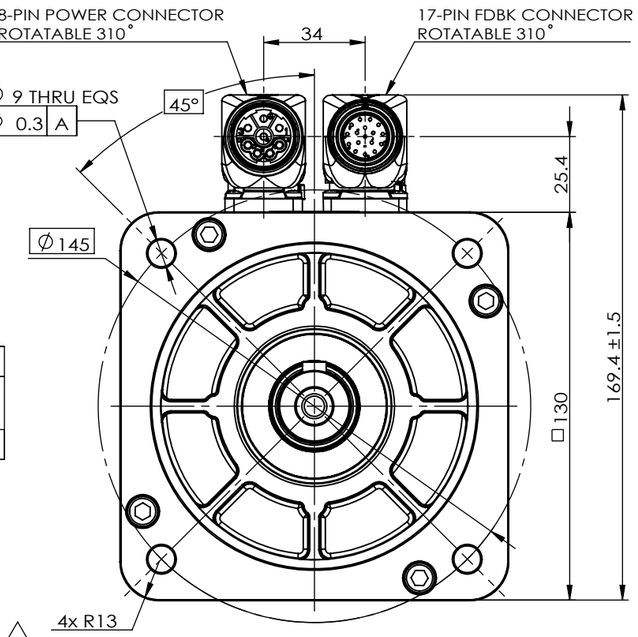

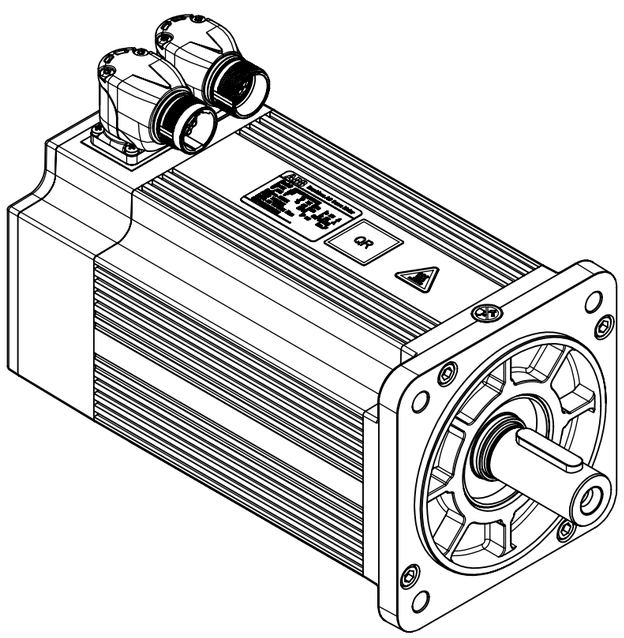

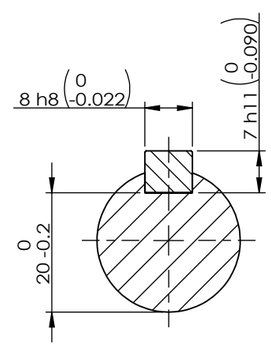

SECTION B-B

NOTES:
1. DIMENSIONS: mm.
2. NOT TOLERANCE DIMENSIONS ±1mm.

02 03 04

MOTOR TYPE	L [mm]	MOMENT OF INERTIA [kg.cm²] WITH BRAKE	MOMENT OF INERTIA [kg.cm²] WITHOUT BRAKE	WEIGHT [kg] 400/460V WITH BRAKE	WEIGHT [kg] 400/460V WITHOUT BRAKE
05 HDS130-0817xRKxx HDS130-0620xRKxx	207	5.14	4.14	8.6	6.6
05 HDS130-0817xE(S/M/S2/M2)Kxx HDS130-0620xE(S/M/S2/M2)Kxx		5.08	4.08		
05 HDS130-0817xD3(4)Kxx HDS130-0620xD3(4)Kxx		5.00	4.00		
HDS130-1226xRKxx	233	8.53	7.53	10.7	8.7
HDS130-1226xE(S/M/S2/M2)Kxx		8.46	7.46		
HDS130-1226xD3(4)Kxx		8.40	7.40		
HDS130-1829xRKxx	251	10.85	9.85	12.2	10.2
HDS130-1829xE(S/M/S2/M2)Kxx		10.79	9.79		
HDS130-1829xD3(4)Kxx		10.68	9.68		
05 HDS130C-0817xRKxx HDS130C-0620xRKxx	207	11.86	10.86	9.5	7.5
05 HDS130C-0817xE(S/M/S2/M2)Kxx HDS130C-0620xE(S/M/S2/M2)Kxx		11.80	10.80		
05 HDS130C-0817xD3(4)Kxx HDS130C-0620xD3(4)Kxx		11.72	10.72		
HDS130C-1226xRKxx	233	15.89	14.89	11.7	9.7
HDS130C-1226xE(S/M/S2/M2)Kxx		15.82	14.82		
HDS130C-1226xD3(4)Kxx		15.76	14.76		
HDS130C-1829xRKxx	251	18.65	17.65	13.3	11.3
HDS130C-1829xE(S/M/S2/M2)Kxx		18.59	17.59		
HDS130C-1829xD3(4)Kxx		18.48	17.48		

01

REV. DESC: ADD NEW TYPE (HDS130-0620A*)			
REV: E	VERSION: 05	REVISED: 10:43:20 02/26/2020	TDR: 000001131817
MODEL NO. HD130LYA001			REF: -
BY: CNLYLIN4	Material: -		B

BALDOR

HDS130 LAYOUT,RES./ENC.,KEY;OPTIONAL:BRAKE,SEAL,HIGH INERTIA

HD130LYA001