HD100LYA001

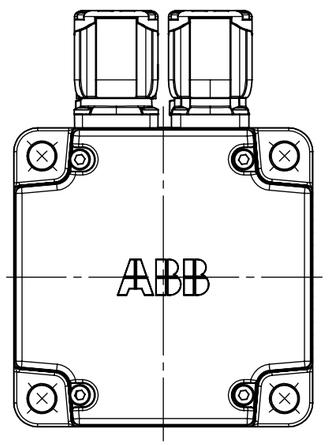

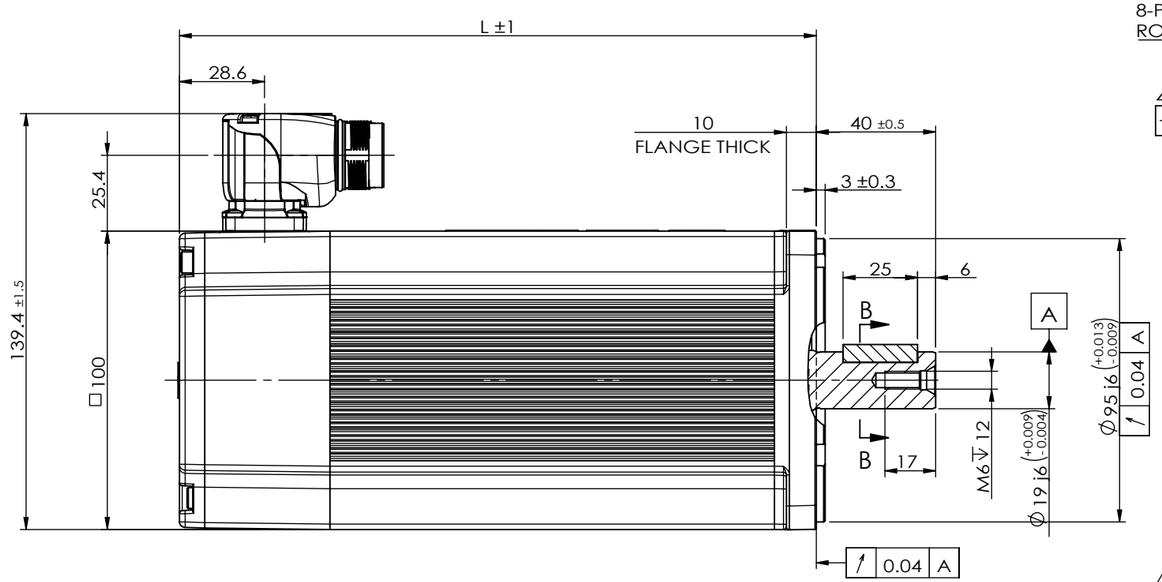

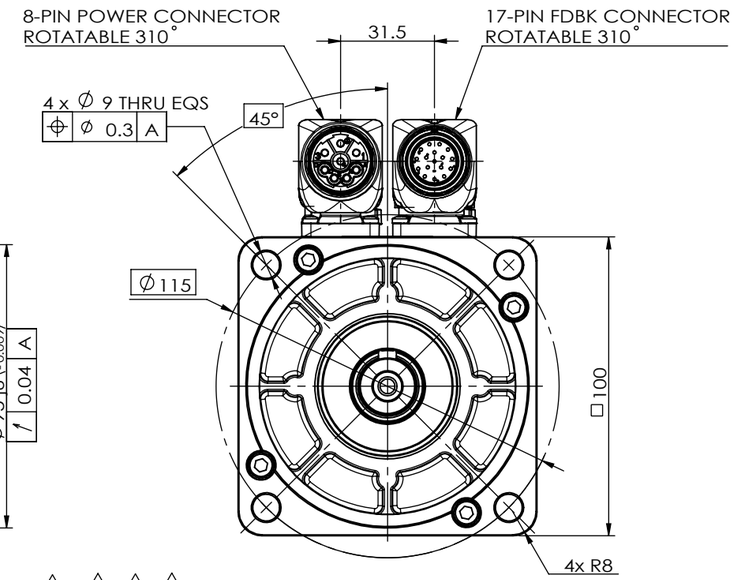

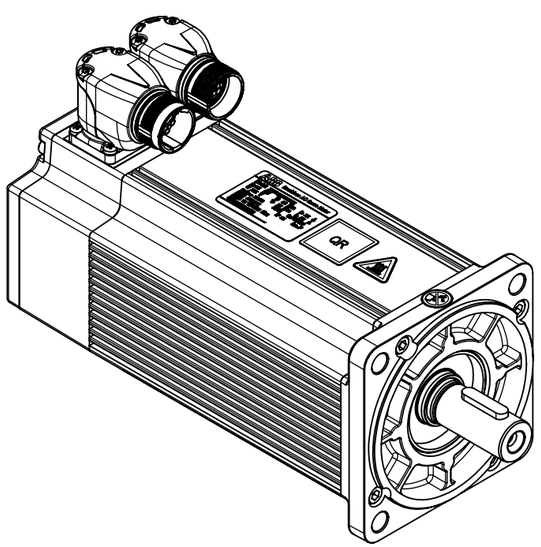

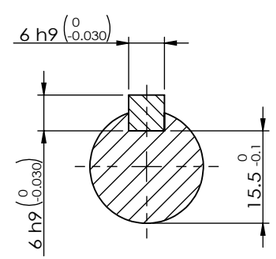

SECTION B-B

NOTES:
1. DIMENSIONS: mm
2. NOT TOLERANCE DIMENSIONS ±1mm

01 02 03 04

MOTOR TYPE	L [mm]	MOMENT OF INERTIA [kg.cm²]		WEIGHT [kg]	
				230V	
		WITH BRAKE	WITHOUT BRAKE	WITH BRAKE	WITHOUT BRAKE
HDS100-0206xRKxx	189.5	0.951	0.821	4.47	3.70
HDS100-0206xE(S/M/S2/M2)Kxx		0.885	0.755		
HDS100-0206xD3(4)Kxx		0.824	0.694		
HDS100-0413xRKxx HDS100-0308xRKxx	213.5	1.496	1.366	5.47	4.70
HDS100-0413xE(S/M/S2/M2)Kxx HDS100-0308xE(S/M/S2/M2)Kxx		1.431	1.301		
HDS100-0413xD3(4)Kxx HDS100-0308xD3(4)Kxx		1.369	1.239		
HDS100-0619xRKxx	237.5	2.040	1.910	6.27	5.50
HDS100-0619xE(S/M/S2/M2)Kxx		1.975	1.845		
HDS100-0619xD3(4)Kxx		1.913	1.783		
HDS100C-0206xRKxx	189.5	2.186	2.056	4.8	4.0
HDS100C-0206xE(S/M/S2/M2)Kxx		2.128	1.998		
HDS100C-0206xD3(4)Kxx		2.068	1.938		
HDS100C-0413xRKxx HDS100C-0308xRKxx	213.5	2.867	2.737	5.8	5.0
HDS100C-0413xE(S/M/S2/M2)Kxx HDS100C-0308xE(S/M/S2/M2)Kxx		2.809	2.679		
HDS100C-0413xD3(4)Kxx HDS100C-0308xD3(4)Kxx		2.749	2.619		
HDS100C-0619xRKxx	237.5	3.538	3.408	6.6	5.8
HDS100C-0619xE(S/M/S2/M2)Kxx		3.480	3.350		
HDS100C-0619xD3(4)Kxx		3.420	3.290		

REV. DESC: REVISE CODE FOR HIPERFACE ENCODER MOTOR			
REV: D	VERSION: 04	REVISED: 03:39:54 04/22/2019	TDR: 000001106375
MODEL NO. HD100LYA001			REF: -
BY: CNLYLIN4	Material: -		B

BALDOR

HDS100 LAYOUT,RES./ENC.,KEY; OPTIONAL:BRAKE,SEAL

HD100LYA001