35LYE5738

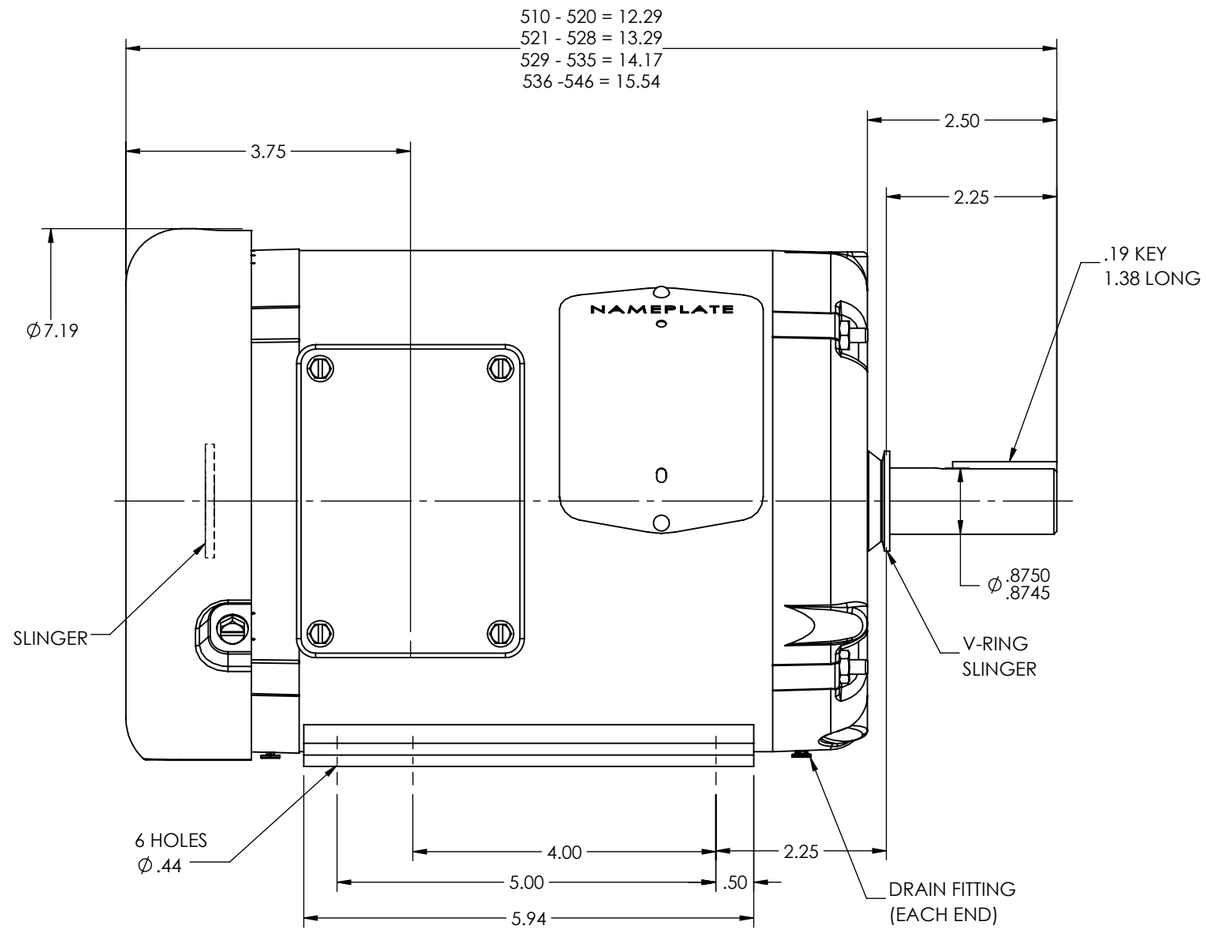

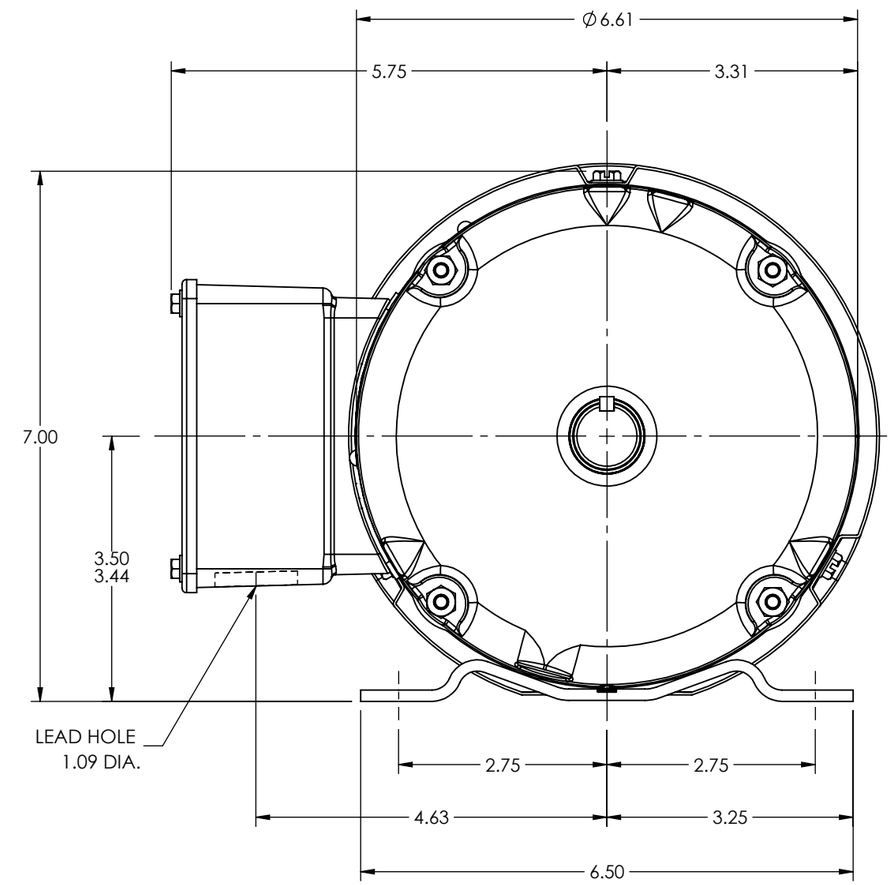

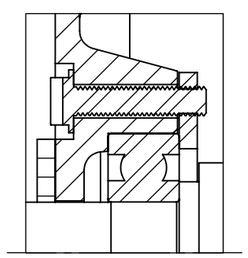

FRONT END DETAIL

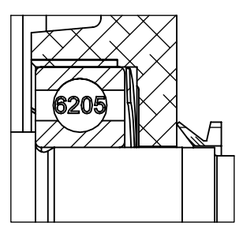

PULLEY END DETAIL

CUSTOMER IS RESPONSIBLE FOR DETERMINING THAT BALDOR'S PRODUCT WILL PERFORM SUITABLY IN THE INTENDED APPLICATION.

REV. DESC: 35SH2K26 WAS 35SH1000, ODE LOCKED BRG			
REV: A	VERSION: 01	REVISED: 09:11:12 07/24/2025	TDR: 000001260306
MODEL NO. 35LYE5738			REF: -
BY: USEROLI	Material: -		B

BALDOR - RELIANCE®

HORZ 143-5T TEFC 35M LOCKED ODE BRG, SLINGERS, NO GREASERS

SH 1 of 1

35LYE5738