09LYT115

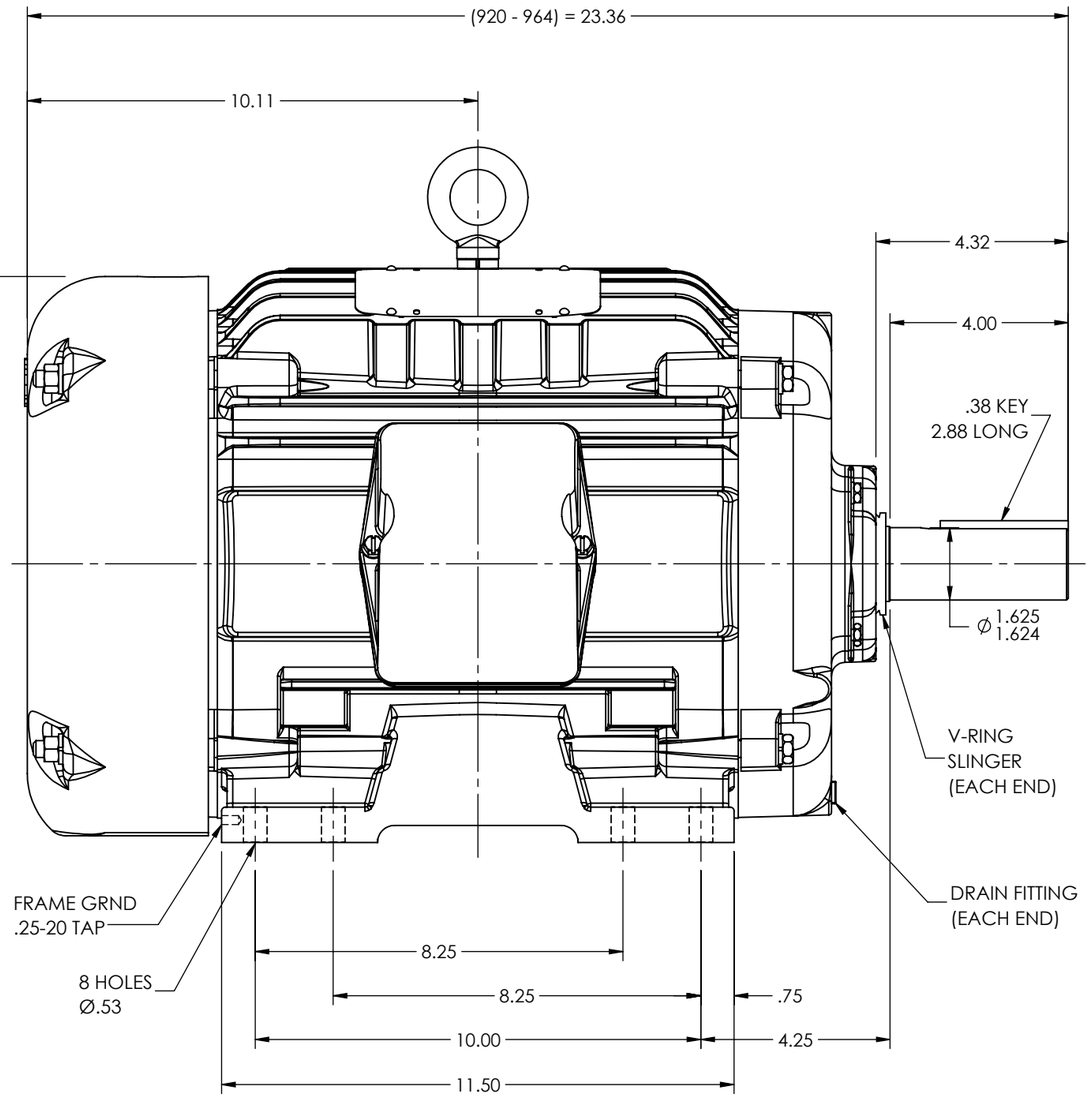

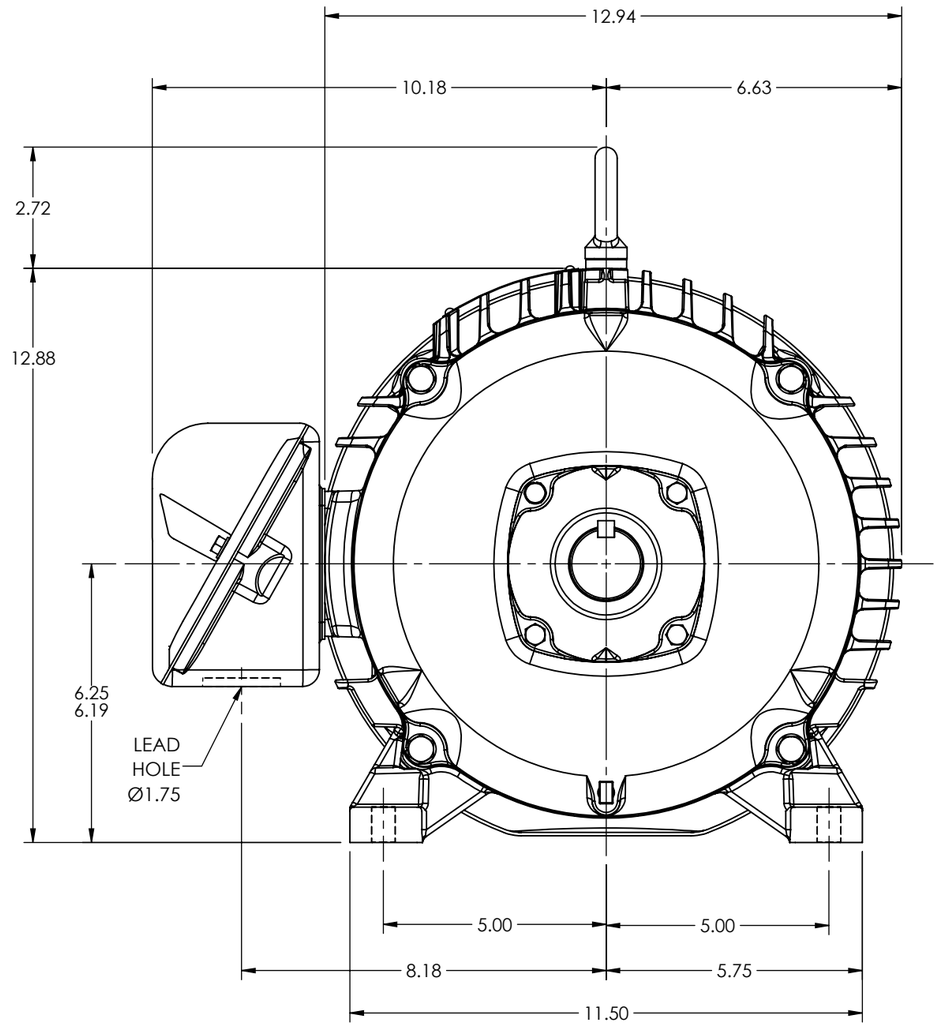

CUSTOMER IS RESPONSIBLE FOR DETERMINING THAT THE PRODUCT WILL PERFORM SUITABLY IN THE INTENDED APPLICATION

REV. DESC: NEW			
REV: -	VERSION: 00	REVISED: 10:04:32 01/20/2022	TDR: 000001182455
MODEL NO. 09LYT115			REF: -
BY: ENFRAJ0			B

BALDOR - RELIANCE®

HORZ TEFC 254-6T SLINGER (EACH END) W/SEALED BRGS.

09LYT115