Customer information packet

GNEM3615T

5HP, 1750//1440RPM, 3PH, 60//50HZ, 184T, 3646
Class - None
Division - Not Applicable

Copyright © All product information within this document is subject to ABB Motors and Mechanical Inc. copyright © protection, unless otherwise noted.
7/8/2026 8:24:31 PM

Specifications

Enclosure	TEFC
Frame	184T
Frame Material	Steel
Frequency	50.00 Hz
	60.00 Hz
Haz Area Class and Group	None
Haz Area Division	Not Applicable
Motor Letter Type	Three Phase
Output @ Frequency	5.000 HP @ 60 HZ
	5.000 HP @ 50 HZ
Phase	3
Synchronous Speed @ Frequency	1800 RPM @ 60 HZ
Voltage @ Frequency	190.0 V @ 50 HZ
	208.0 V @ 60 HZ
	230.0 V @ 60 HZ
	380.0 V @ 50 HZ
	460.0 V @ 60 HZ
Agency Approvals	CE
	UKCA
	WEEE
	CURUS
	IE3
	NEMA PREMIUM
	NEMA PREMIUM (OLD LOGO)
Ambient Temperature	40 °C
Auxiliary Box	NO AUXILLARY BOX
Auxiliary Box Lead Termination	None
Base Indicator	Rigid
Bearing Grease Type	Polyrex EM (-20F +300F)
Blower	None
Current @ Voltage	6.600 A @ 460.0 V
	7.700 A @ 380.0 V

Part Detail

Revision	K
Type	AC
Mech. spec.	36G271
Base	
Status	PRD/A
Elec. spec.	36WGR014
Layout	36LYG271
Eff. date	06-16-2026
CD Diagram	CD0005
Poles	04
Leads	9#16
Proprietary	False
Created date	02-16-2017

	15.400 A @ 190.0 V
	14.000 A @ 208.0 V
	13.000 A @ 230.0 V
Design Code	A
Drip Cover	No Drip Cover
Duty Rating	CONT
Efficiency @ 100% Load	90.2 %
Electrically Isolated Bearing	Not Electrically Isolated
Feedback Device	NO FEEDBACK
Front Face Code	Standard
Front Shaft Indicator	None
Heater Indicator	No Heater
High Voltage Full Load Amps	6.6 a
Insulation Class	F
Inverter Code	Inverter Ready
KVA Code	L
Lifting Lugs	No Lifting Lugs
Locked Bearing Indicator	No Locked Bearing
Motor Lead Exit	Ko Box
Motor Lead Quantity/Wire Size	9 @ 16 AWG
Motor Lead Termination	Flying Leads
Motor Standards	NEMA
Motor Type	3646M
Mounting Arrangement	F1
Number of Poles	4
Overall Length	18.05 IN
Power Factor	78
Product Family	General Purpose
Pulley End Bearing Type	Ball
Pulley Face Code	Standard
Pulley Shaft Indicator	Standard
Rodent Screen	None
RoHS Status	ROHS COMPLIANT
Service Factor	1.15

Shaft Diameter	1.125 IN
Shaft Extension Location	Pulley End
Shaft Ground Indicator	No Shaft Grounding
Shaft Rotation	Reversible
Shaft Slinger Indicator	No Slinger
Speed	1440 rpm 1750 rpm
Speed Code	Single Speed
Starting Method	Direct on line
Thermal Device - Bearing	None
Thermal Device - Winding	None
Vibration Sensor Indicator	No Vibration Sensor
Winding Thermal 1	None
Winding Thermal 2	None

Nameplate

NP4304L								
CAT.NO.	GNEM3615T							
SPEC.	36G271R014G1							
HP	5/3.7KW				**PH**	3		
VOLTS	208-230/460//190/380							
AMPS	14-13/6.6//15.4/7.7							
R.P.M. (1/MIN)	1750//1440				**WT.**	45KG	**KG**	
FRAME	184T	**HZ**	60//50		**I.P.**	44		
SER.F.	1.15	**CODE**	L	**DES.**	A	**CLASS**	F	
NOM.EFF.	90.2//88.6	**% (100%)**						
P.F.	78	IC411, 10:1 VT						
RATING	40C AMB-S1 CONT			**CC**	010A			
DE	6206	**ODE**	6205					
ENCL	TEFC	**SN**						
	IE3-50HZ 89.5(75%),89.7(50%)							
	IE3-60HZ 90.4(75%),89.3(50%)							

ABB Motors and Mechanical Inc.

WINDING # 36WGR014

5 HP 3 PH 50 HZ 1449 RPM 380 V 3646M

Typical performance - not guaranteed values.

TORQUES(LB-FT): PO=63.26 PU=33.01 LR=42.9 LRA=55.17

TORQUE ____ ____ ____ ____ ____ ____ AMPS ____ ____ ____ ____ ____ ____

RPM ____ ____ ____ ____ ____ ____ EFF ____

KW ____ ____ ____ ____ ____ ____ PF ____ ____ ____

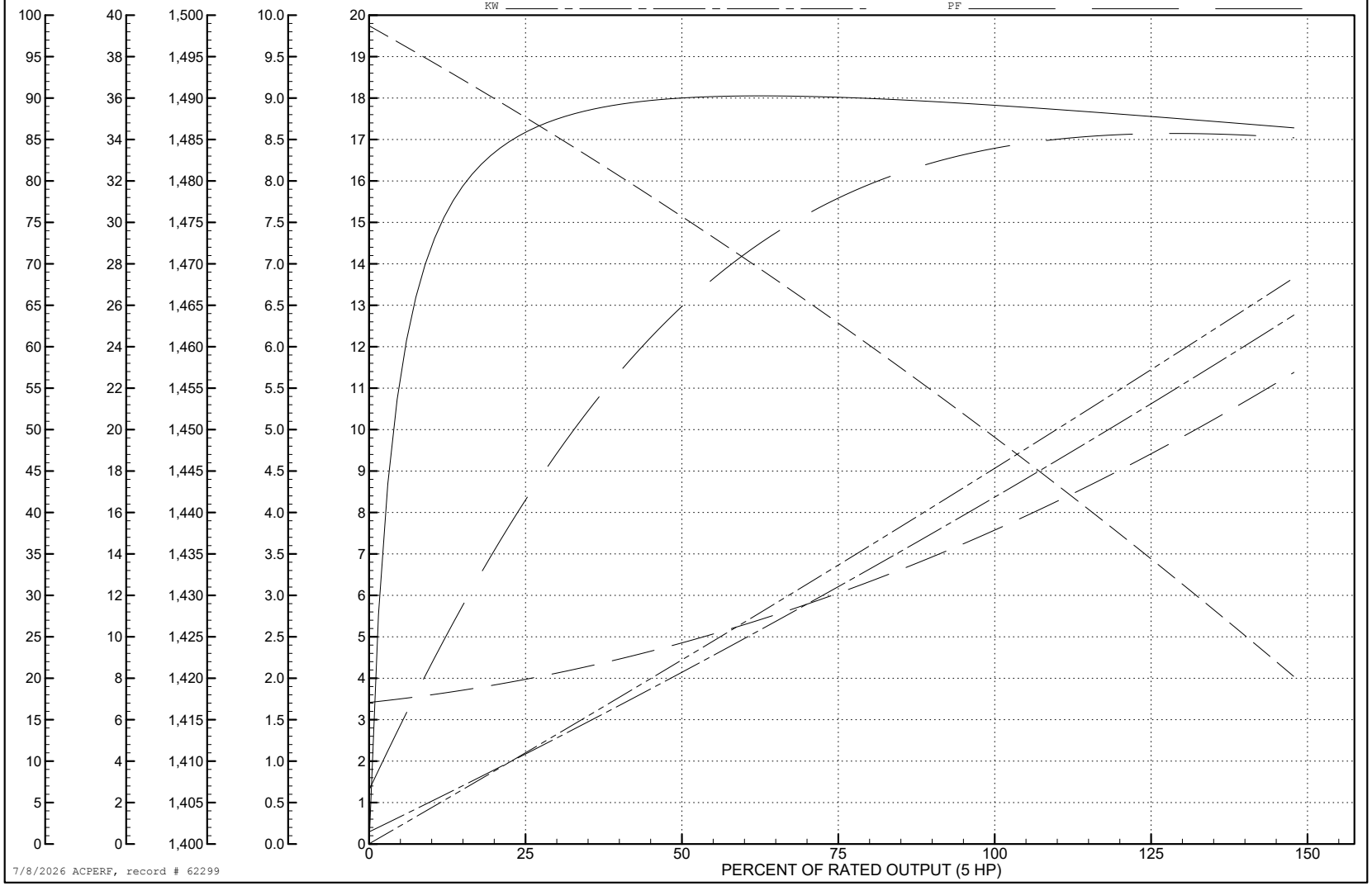

7/8/2026 ACPERF, record # 62299

ABB Motors and Mechanical Inc.

WINDING # 36WGR014

5 HP 3 PH 60 HZ 1756 RPM 460 V 3646M

Typical performance - not guaranteed values.

TORQUES(LB-FT): PO=67.5 PU=32.7 LR=42.5 LRA=58.2

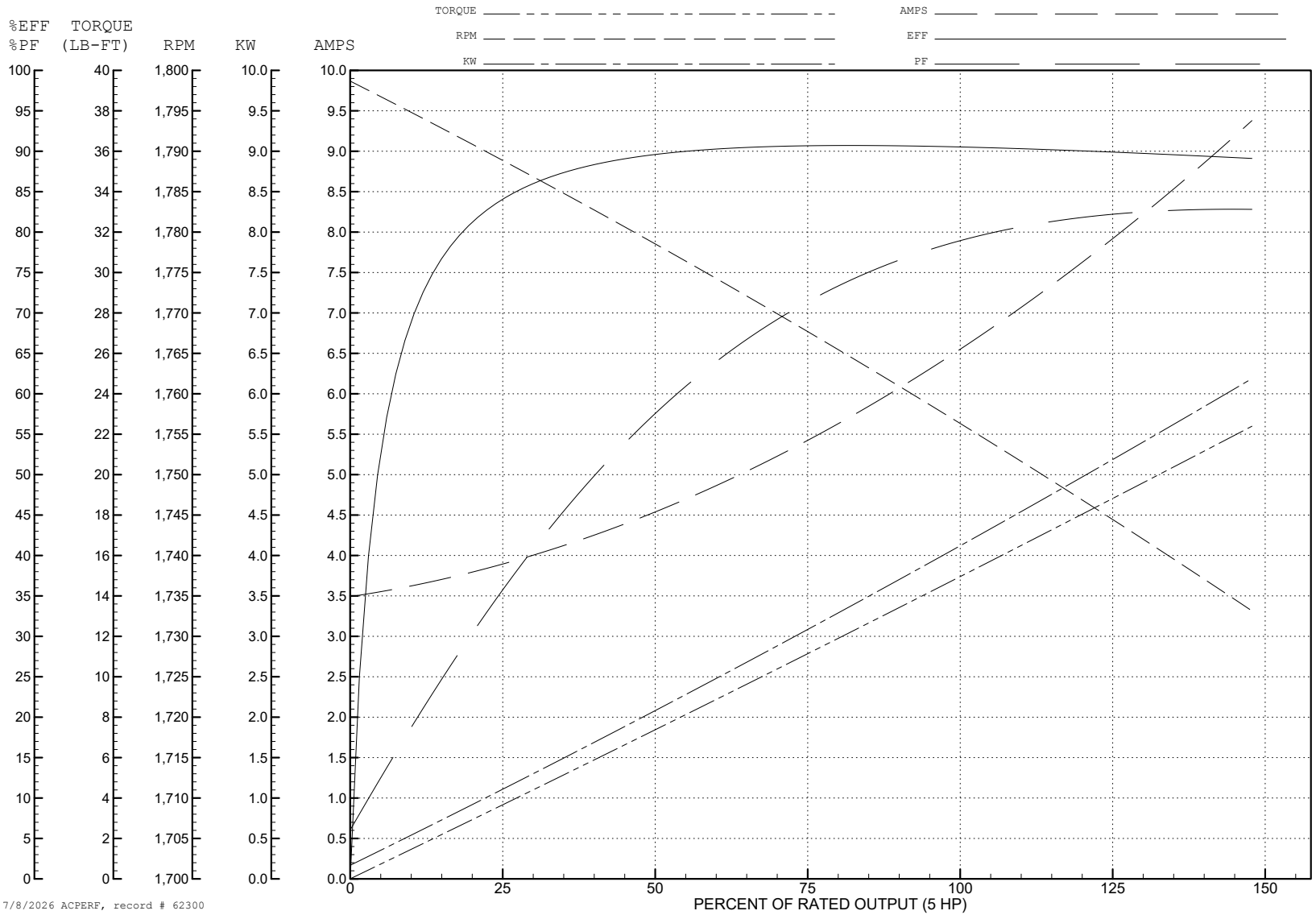

7/8/2026 ACPERF, record # 62300

ABB Motors and Mechanical Inc.

WINDING # 36WGR014

5 HP 3 PH 60 HZ 1442 RPM 208 V 3646M

TORQUES(LB-FT): PO=51.6 PU=26.8 LR=34.8 LRA=99.4

Typical performance - not guaranteed values.

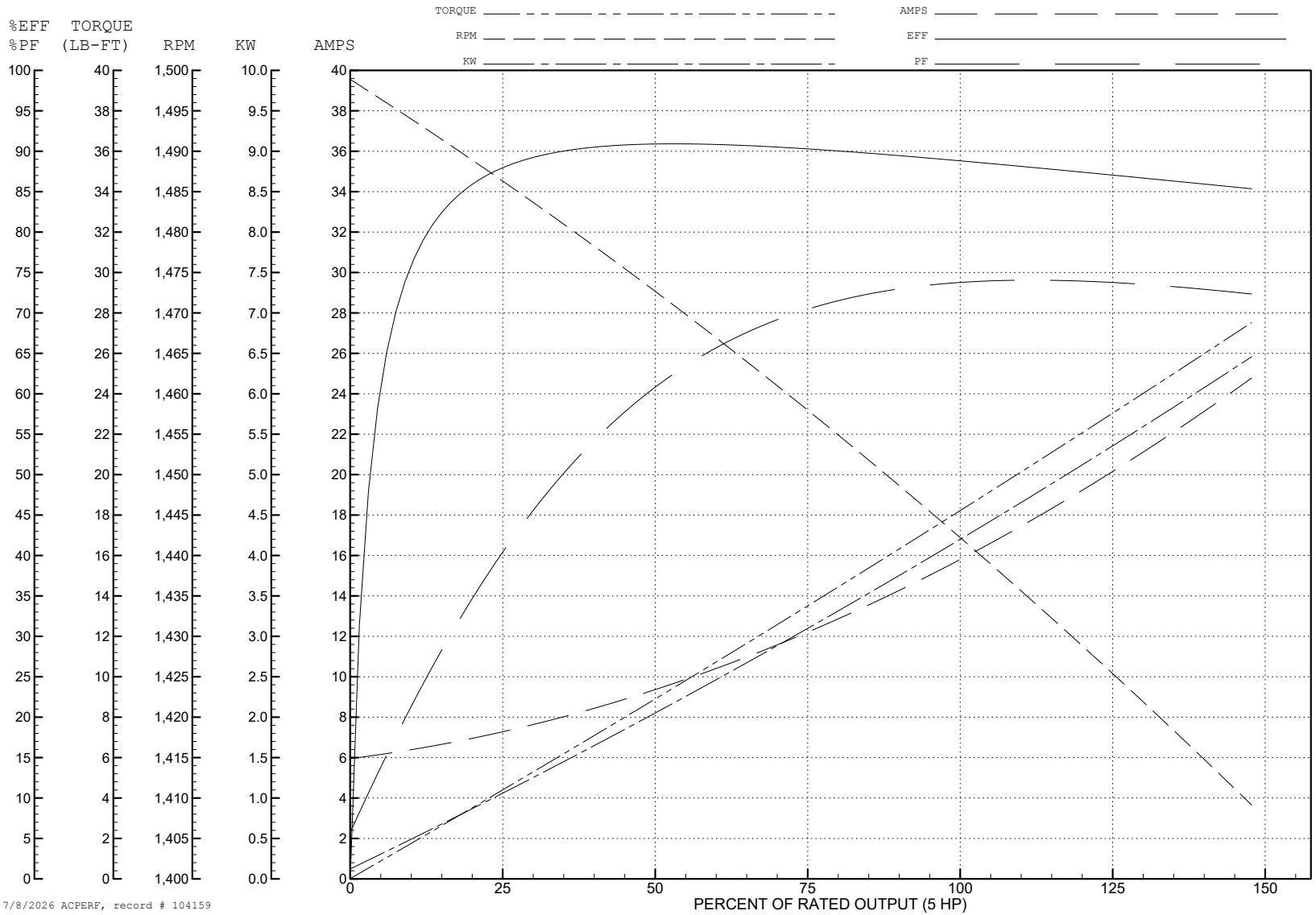

7/8/2026 ACPERF, record # 104159

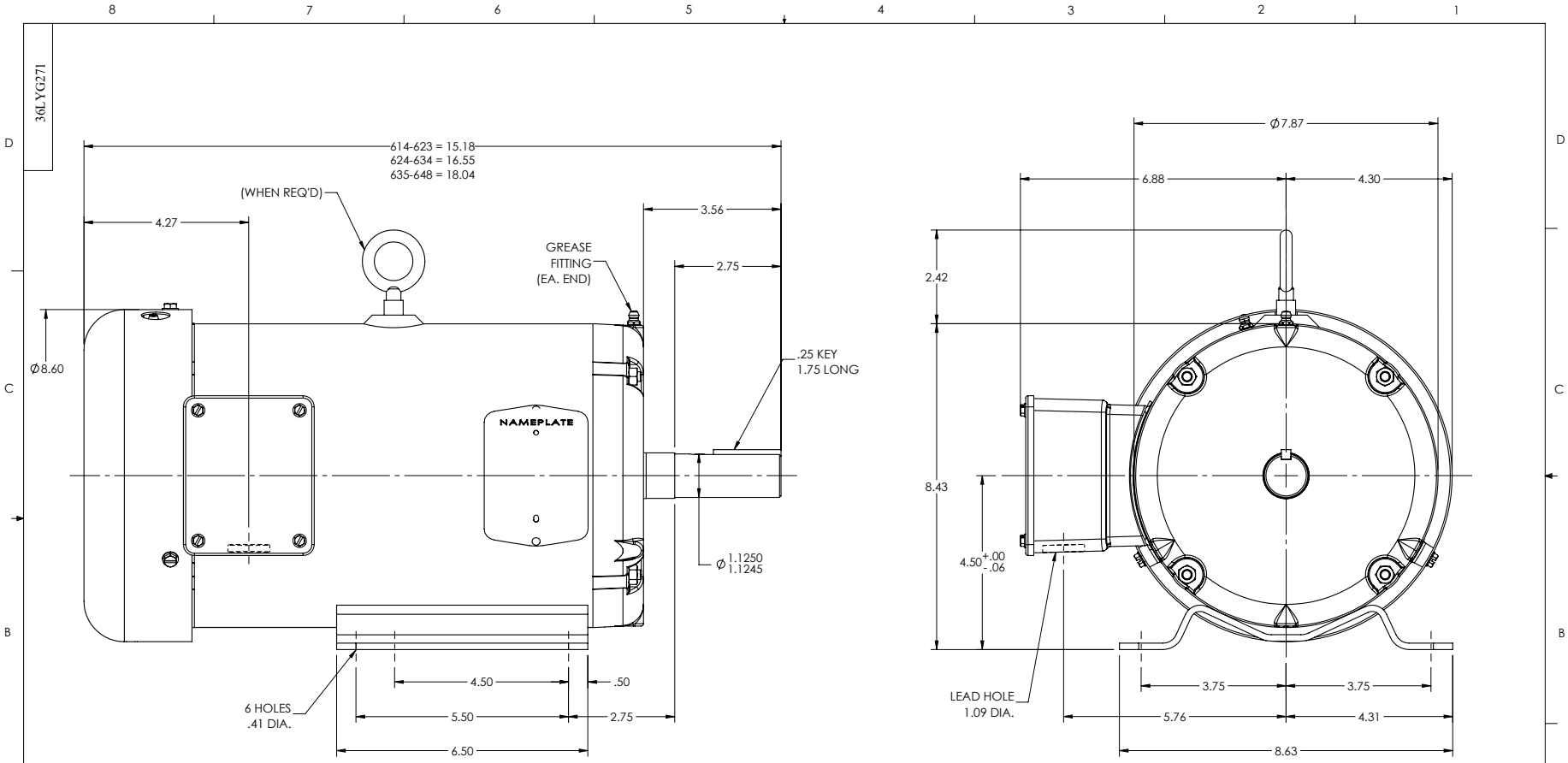

CUSTOMER IS RESPONSIBLE FOR DETERMINING THAT THE PRODUCT WILL PERFORM SUITABLY IN THE INTENDED APPLICATION

REV. DESC: CHANGE LIFTING EYE TO WHEN REQ			BALDOR - RELIANCE®
REV: M	VERSION: 08	REVISED: 03:11:16 10/09/2025	TDR: 000001265027
MODEL NO. 36LYG271		REF: -	STD HORZ 182-4T TEFC 36M SUPER-E
BY: USTRTAY1		B	

36LYG271

CD0005

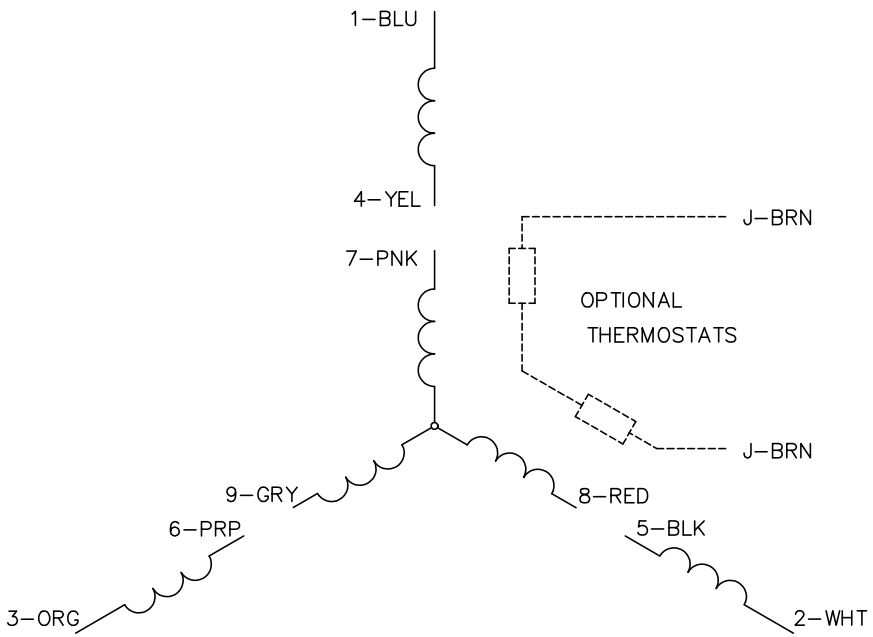

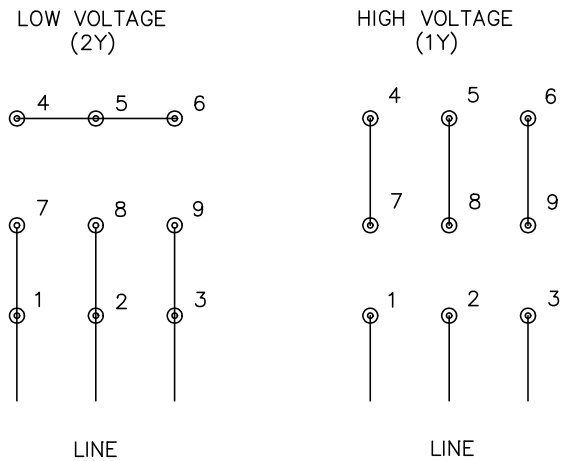

NOTES:

1. INTERCHANGE ANY TWO LINE LEADS TO REVERSE ROTATION.
2. OPTIONAL THERMOSTATS ARE PROVIDED WHEN SPECIFIED.
3. ACTUAL NUMBER OF INTERNAL PARALLEL CIRCUITS MAY BE A MULTIPLE OF THOSE SHOWN ABOVE.
4. LEAD COLORS ARE OPTIONAL. LEADS MUST ALWAYS BE NUMBERED AS SHOWN.

CD0005

REV. DESC: REVISE TO SHOW OPTIONAL COLORS			
REV. LTR: E	BY: JLP	REVISED: 01/19/99 10:15	TDR: 0171435
CD0005		FILE: AAA00005140	MDL: –
		MTL: –	

BALDOR ELECTRIC Co.

3PH, DV, 9 LEADS