40LYE430

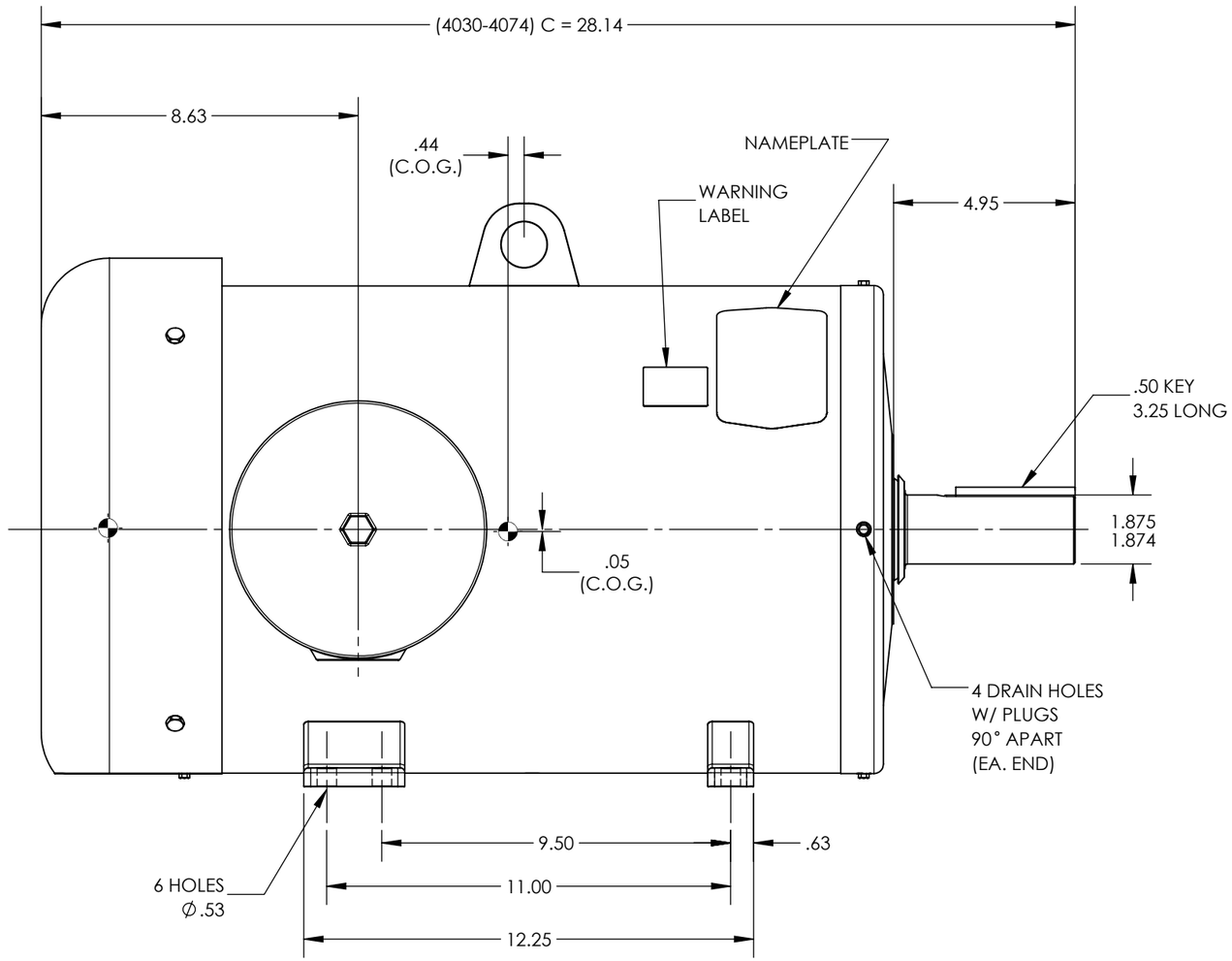

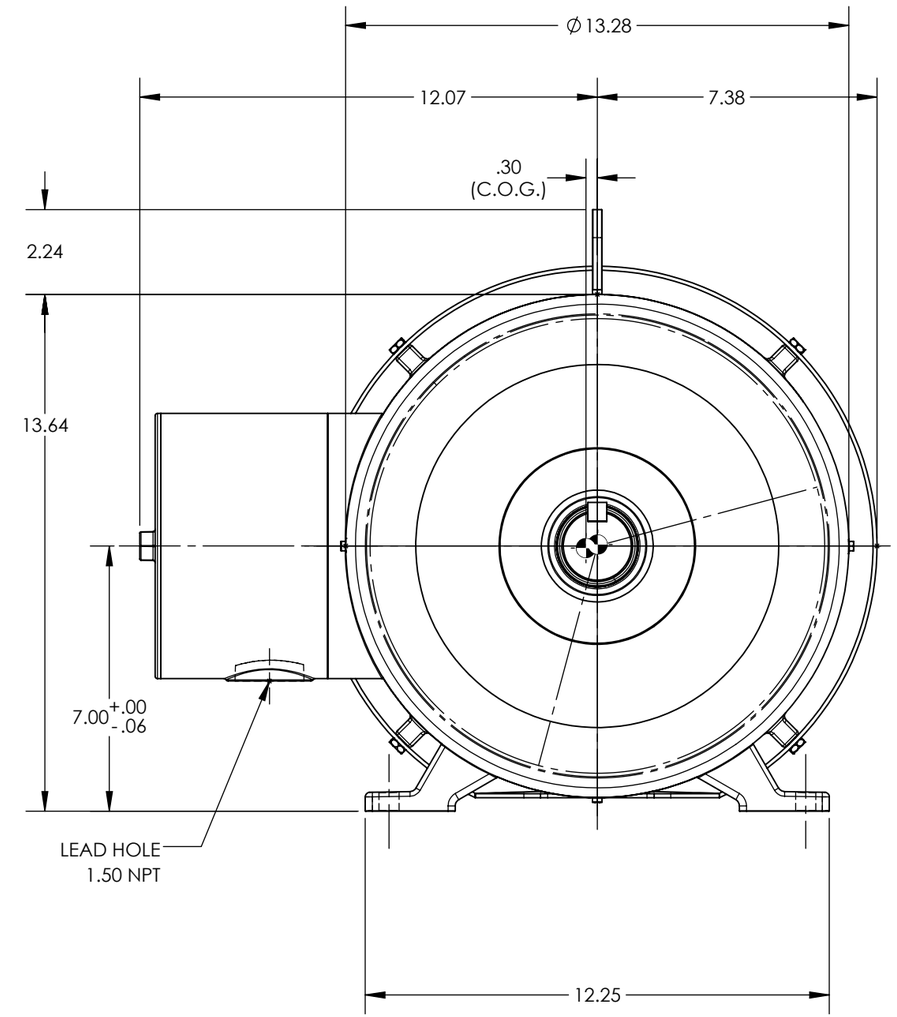

NOTE:
C.O.G. MAY VARY SLIGHTLY DEPENDING ON ELECTRICAL SPECIFICATIONS +/- .5

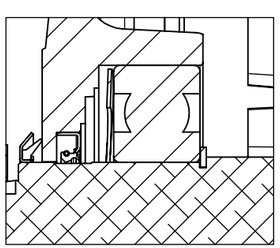

FRONT END DETAIL

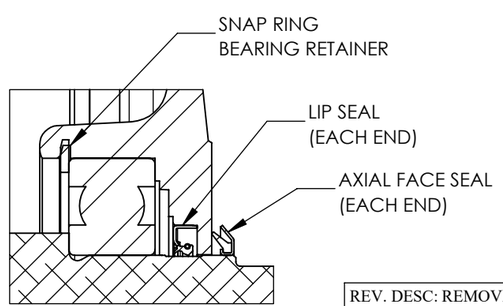

PULLEY END DETAIL

CUSTOMER IS RESPONSIBLE FOR DETERMINING THAT THE PRODUCT WILL PERFORM SUITABLY IN THE INTENDED APPLICATION

REV. DESC: REMOVE FACE DRAINS,DRAIN FTG;ADD DRAIN PLUG;NP UPD			
REV: F	VERSION: 06	REVISED: 11:25:57 08/24/2023	TDR: 000001202651
MODEL NO. 40LYE430			REF: -
BY: ENFRAJ0			B

BALDOR - RELIANCE®

HORZ TEFC 284-6T WD11 LIP & FACE SEALS

40LYE430