ABB BALDOR RELIANCE

Customer information packet

FSWDM3546-E

1HP, 1770RPM, 3PH, 60HZ, 56, 3522M, TENV, F1, N
Class - None
Division - Not Applicable

Copyright © All product information within this document is subject to ABB Motors and Mechanical Inc. copyright © protection, unless otherwise noted.
11/23/2026 2:52:45 AM

Specifications

Enclosure	TENV
Frame	56
Frame Material	Stainless Steel
Frequency	60.00 Hz
Haz Area Class and Group	None
Haz Area Division	Not Applicable
Motor Letter Type	Three Phase
Output @ Frequency	1.000 HP @ 60 HZ
Phase	3
Synchronous Speed @ Frequency	1800 RPM @ 60 HZ
Voltage @ Frequency	230.0 V @ 60 HZ
	460.0 V @ 60 HZ
Agency Approvals	CSA EEV
	NEMA PREMIUM
	NEMA_PREMIUM
	UR
Ambient Temperature	40 °C
Auxiliary Box	NO AUXILLARY BOX
Auxiliary Box Lead Termination	None
Base Indicator	Rigid
Bearing Grease Type	Polyrex EM (-20F +300F)
Blower	None
Current @ Voltage	3.340 A @ 230.0 V
	3.300 A @ 208.0 V
	1.670 A @ 460.0 V
Design Code	B
Drip Cover	No Drip Cover
Duty Rating	CONT
Efficiency @ 100% Load	85.5 %
Electrically Isolated Bearing	Not Electrically Isolated
Feedback Device	NO FEEDBACK
Front Shaft Indicator	None

Part Detail

Revision	E
Type	AC
Mech. spec.	35E4927
Base	
Status	PRD/A
Elec. spec.	35WGG184
Layout	35LYE4927
Eff. date	06-23-2026
CD Diagram	CD0005
Poles	04
Leads	9#18
Proprietary	False
Created date	01-10-2022

Heater Indicator	No Heater
High Voltage Full Load Amps	1.7 a
Insulation Class	H
Inverter Code	Inverter Ready
KVA Code	N
Lifting Lugs	No Lifting Lugs
Locked Bearing Indicator	Locked Bearing
Motor Finish	UNPAINTED
Motor Lead Quantity/Wire Size	9 @ 18 AWG
Motor Lead Termination	Flying Leads
Motor Standards	NEMA
Motor Type	3522M
Mounting Arrangement	F1
Number of Poles	4
Overall Length	12.78 IN
Power Factor	66
Product Family	WD All SD Non-Encapsulated
Pulley End Bearing Type	Sealed Bearing
Pulley Face Code	Standard
Pulley Shaft Indicator	Standard
Rodent Screen	None
Service Factor	1.15
Shaft Diameter	0.625 IN
Shaft Ground Indicator	No Shaft Grounding
Shaft Rotation	Reversible
Shaft Slinger Indicator	No Slinger
Speed	1770 rpm
Speed Code	Single Speed
Starting Method	Direct on line
Thermal Device - Bearing	None
Thermal Device - Winding	None
Vibration Sensor Indicator	No Vibration Sensor
Winding Thermal 1	None
Winding Thermal 2	None

Nameplate

NP4427AAA01												
CAT #	FSWDM3546-E			**WT**	37	**LBS**						
SPEC	35E4927G184G1			**ENCL**	TENV							
SER #				**CC**	010A	**IP**	69					
HP	1			**MAG CUR**	2.5/1.25							
VOLTS	230/460					**NEMA NOM. EFF**	85.5					
AMPS	3.34/1.67					**PF**	66					
RATING	40C AMB-CONT											
RPM	1770					**MAX RPM**	2700					
FRAME	56	**HZ**	60	**CODE**	N	**CLASS**	H					
SER.F.	1.15	**SF AMP**	3.5/1.75			**PH**	3	**DES**	B			
DE	6205			**ODE**	6205							
LUBRICATION	POLYREX EM											
ID LOGO		**INVERTER TYPE**		**VPWM**		**CHP**	60	**TO**	90		1.5:1	
ID LOGO	**WK2**	0.159	**CT**	15	**TO**	60		4:1				
ID LOGO	**SL HZ**	1	**VT**	3	**TO**	60		20:1				
						QR						
YR												

AC Induction Motor Performance Data
Record # 87470
Typical performance - not guaranteed values

Winding: 35WGG184-R004	**Type:** 3522M	**Enclosure:** TENV

Nameplate Data				**460 V, 60 Hz: High Voltage Connection**	
Rated Output (HP)			1	**Full Load Torque**	2.99 LB-FT
Volts			230/460	**Start Configuration**	direct on line
Full Load Amps			3.34/1.67	**Breakdown Torque**	16.6 LB-FT
R.P.M.			1770	**Pull-up Torque**	7.42 LB-FT
Hz	60	**Phase**	3	**Locked-rotor Torque**	10.32 LB-FT
NEMA Design Code	B	**KVA Code**	N	**Starting Current**	16.1 A
Service Factor (S.F.)			1.15	**No-load Current**	1.23 A
NEMA Nom. Eff.	85.5	**Power Factor**	66	**Line-line Res. @ 25ºC**	14.4 Ω
Rating - Duty			40C AMB-CONT	**Temp. Rise @ Rated Load**	63°C
S.F. Amps				**Temp. Rise @ S.F. Load**	71°C
				Locked-rotor Power Factor	59.4
				Rotor inertia	0.159 lb-ft²

Load Characteristics 460 V, 60 Hz, 1 HP

% of Rated Load	**25**	**50**	**75**	**100**	**125**	**150**	**S.F.**
Power Factor	27	43	56	66	73	78	72
Efficiency	70.8	81.2	84.5	85.9	85.8	85.2	85.5
Speed	1793	1786	1781	1773	1766	1758	1768
Line amperes	1.25	1.34	1.49	1.67	1.87	2.12	1.75

ABB Motors and Mechanical Inc.

WINDING # 35WGG184

1 HP 3 PH 60 HZ 1770 RPM 460 V 3522M

Typical performance - not guaranteed values.

TORQUES(LB-FT): PO=16.6 PU=7.42 LR=10.32 LRA=16.1

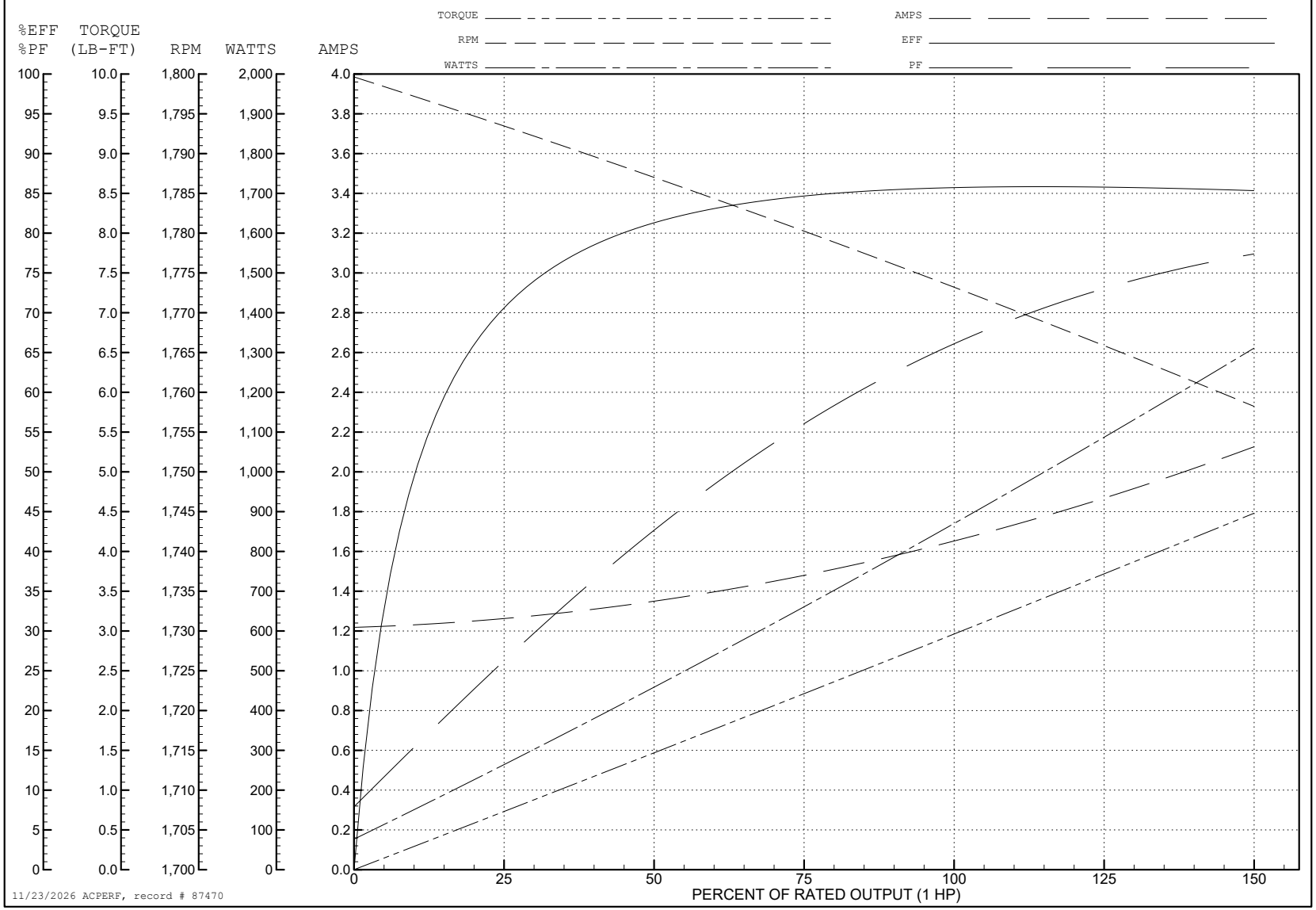

11/23/2026 ACPERF, record # 87470

AC Induction Motor Performance Data
Record # 89717
Typical performance - not guaranteed values

Winding: 35WGG184-R010	**Type:** 3522M	**Enclosure:** TENV

Nameplate Data				**460 V, 60 Hz: High Voltage Connection**	
Rated Output (HP)			1	**Full Load Torque**	2.99 LB-FT
Volts			208-230/460	**Start Configuration**	direct on line
Full Load Amps			3.3-3.34/1.67	**Breakdown Torque**	16.6 LB-FT
R.P.M.			1770	**Pull-up Torque**	7.42 LB-FT
Hz	60	**Phase**	3	**Locked-rotor Torque**	10.32 LB-FT
NEMA Design Code	B	**KVA Code**	N	**Starting Current**	16.1 A
Service Factor (S.F.)			1.15	**No-load Current**	1.23 A
NEMA Nom. Eff.	85.5	**Power Factor**	66	**Line-line Res. @ 25ºC**	14.4 Ω
Rating - Duty			65C AMB-CONT	**Temp. Rise @ Rated Load**	63°C
S.F. Amps			3.6-3.5/1.75	**Temp. Rise @ S.F. Load**	71°C
				Locked-rotor Power Factor	59.3666
				Rotor inertia	0.159 lb-ft²

Load Characteristics 460 V, 60 Hz, 1 HP

% of Rated Load	**25**	**50**	**75**	**100**	**125**	**150**	**S.F.**
Power Factor	27	43	56	66	73	78	70
Efficiency	70.8	81.2	84.5	85.9	85.8	85.2	85.8
Speed	1793	1786	1781	1773	1766	1758	1769
Line amperes	1.25	1.34	1.49	1.67	1.87	2.12	1.79

ABB Motors and Mechanical Inc.

WINDING # 35WGG184

1 HP 3 PH 60 HZ 1770 RPM 460 V 3522M

Typical performance - not guaranteed values.

TORQUES(LB-FT): PO=16.6 PU=7.42 LR=10.32 LRA=16.1

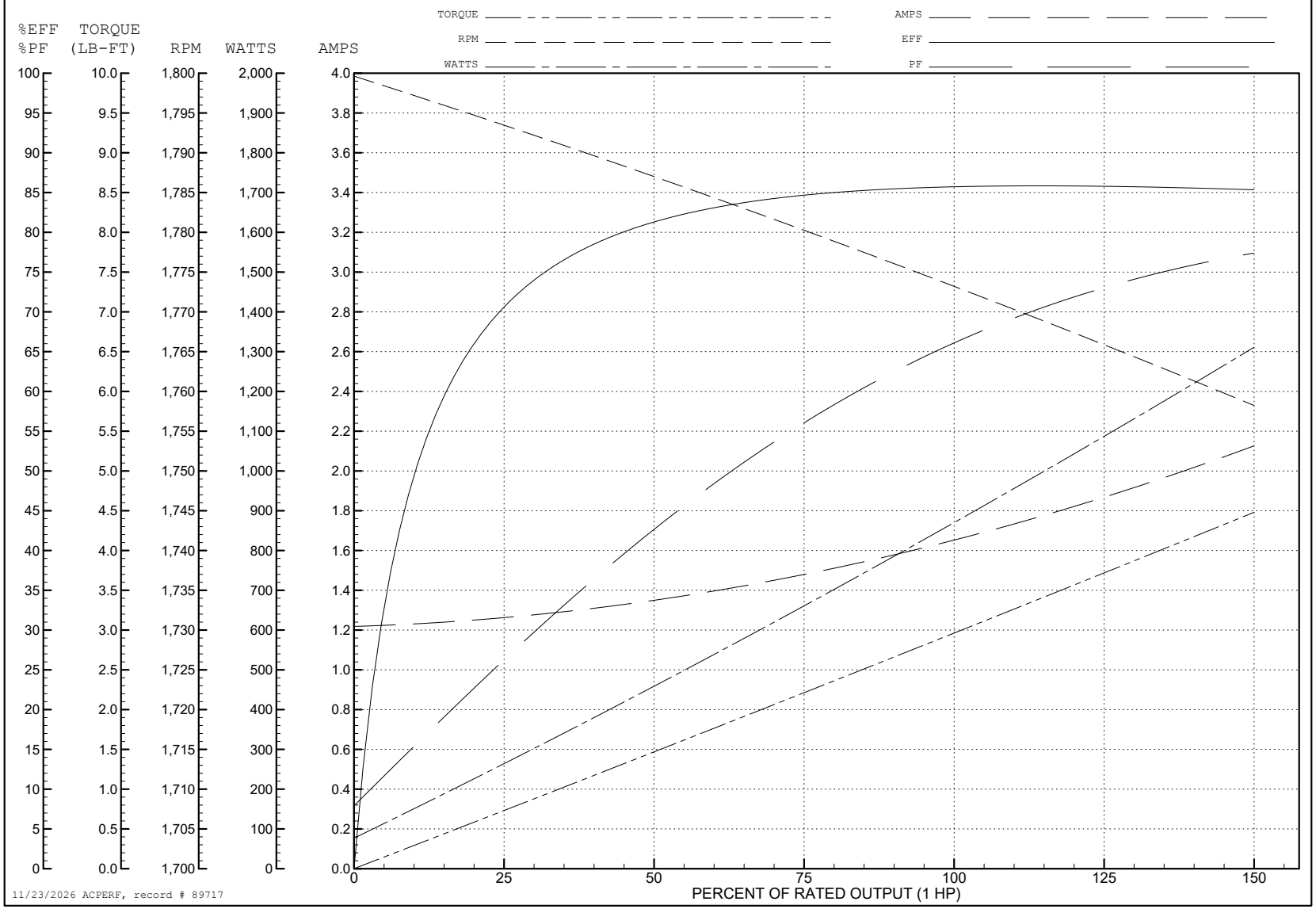

35LYE4927

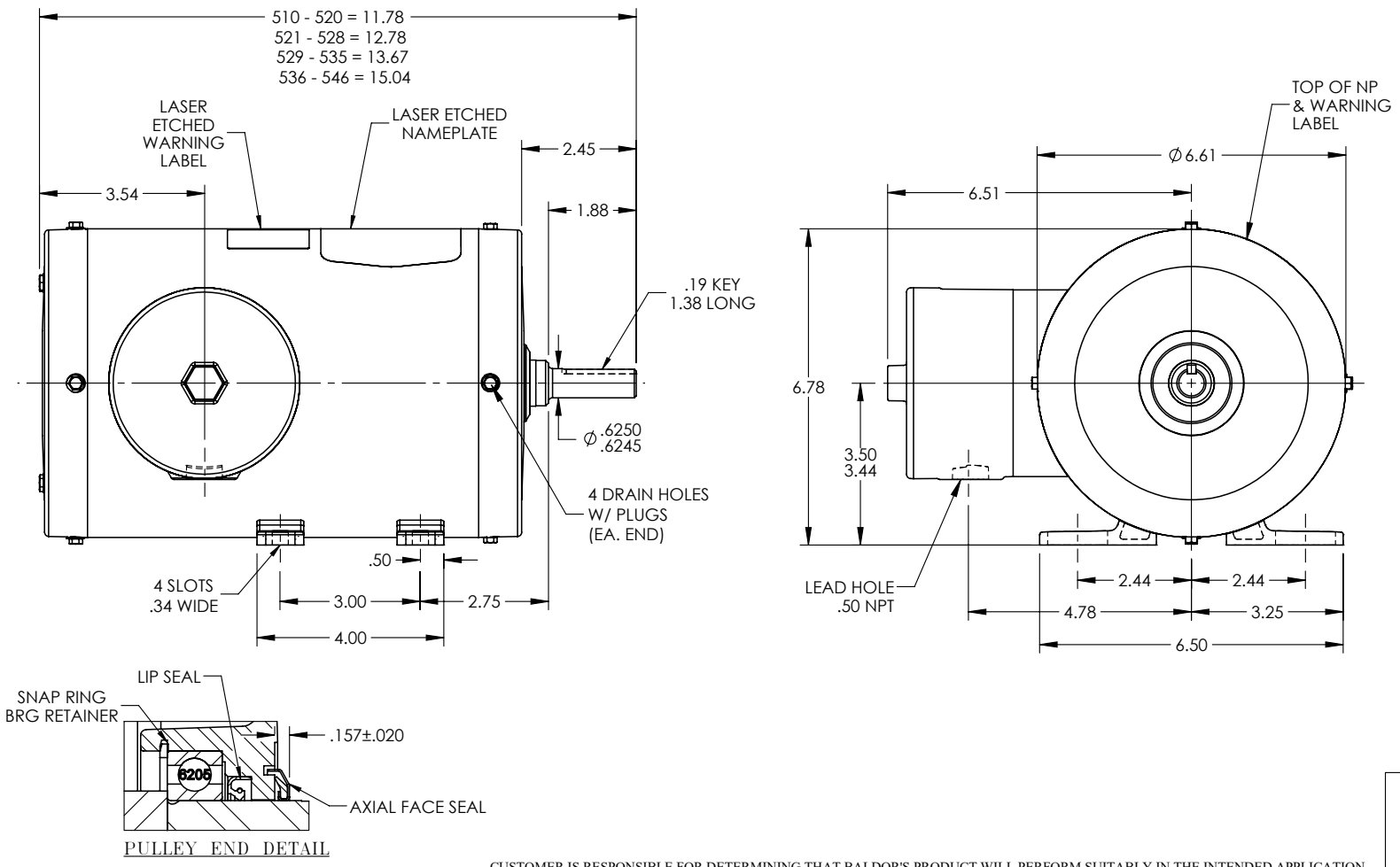

CUSTOMER IS RESPONSIBLE FOR DETERMINING THAT BALDOR'S PRODUCT WILL PERFORM SUITABLY IN THE INTENDED APPLICATION

REV. DESC: ADD DIM TO AXIAL SEAL LOCATION			
REV: C	VERSION: 03	REVISED: 01:29:56 07/23/2026	TDR: 000001276312
35LYE4927	MODEL NO. 35LYE4927		REF: -
	BY: USALMAZ		STD HORZ 56 TENV 35M WD11/12

BALDOR

35LYE4927

CD0005

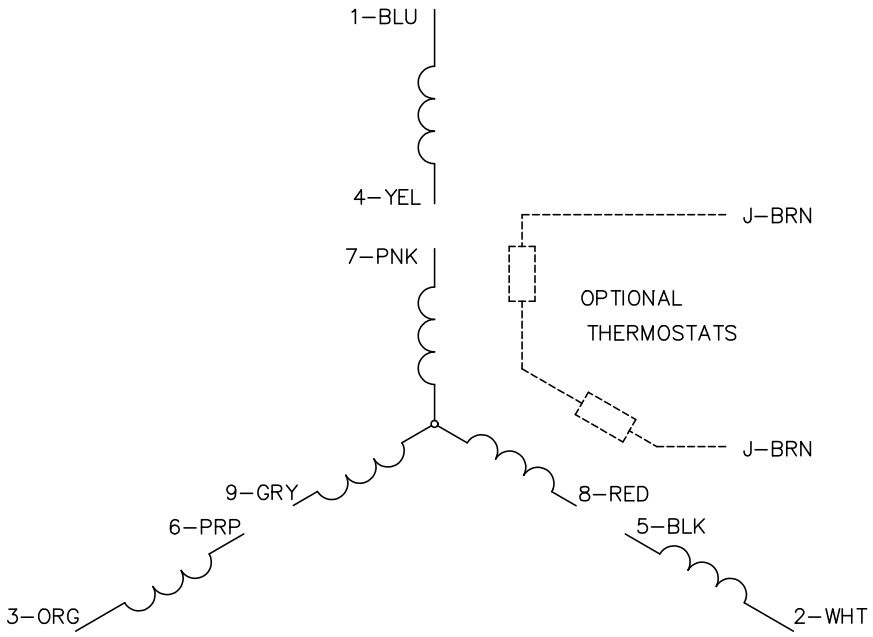

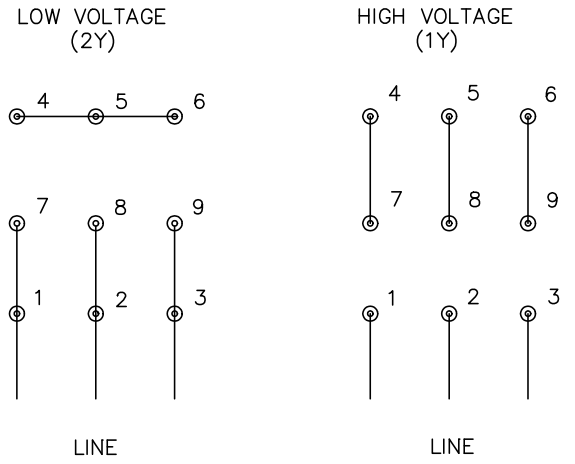

NOTES:

1. INTERCHANGE ANY TWO LINE LEADS TO REVERSE ROTATION.
2. OPTIONAL THERMOSTATS ARE PROVIDED WHEN SPECIFIED.
3. ACTUAL NUMBER OF INTERNAL PARALLEL CIRCUITS MAY BE A MULTIPLE OF THOSE SHOWN ABOVE.
4. LEAD COLORS ARE OPTIONAL. LEADS MUST ALWAYS BE NUMBERED AS SHOWN.

CD0005

REV. DESC: REVISE TO SHOW OPTIONAL COLORS			BALDOR ELECTRIC Co.
REV. LTR: E	BY: JLP	REVISED: 01/19/99 10:15	TDR: 0171435
CD0005		FILE: AAA00005140	MDL: –
		MTL: –	3PH, DV, 9 LEADS