37LYN373

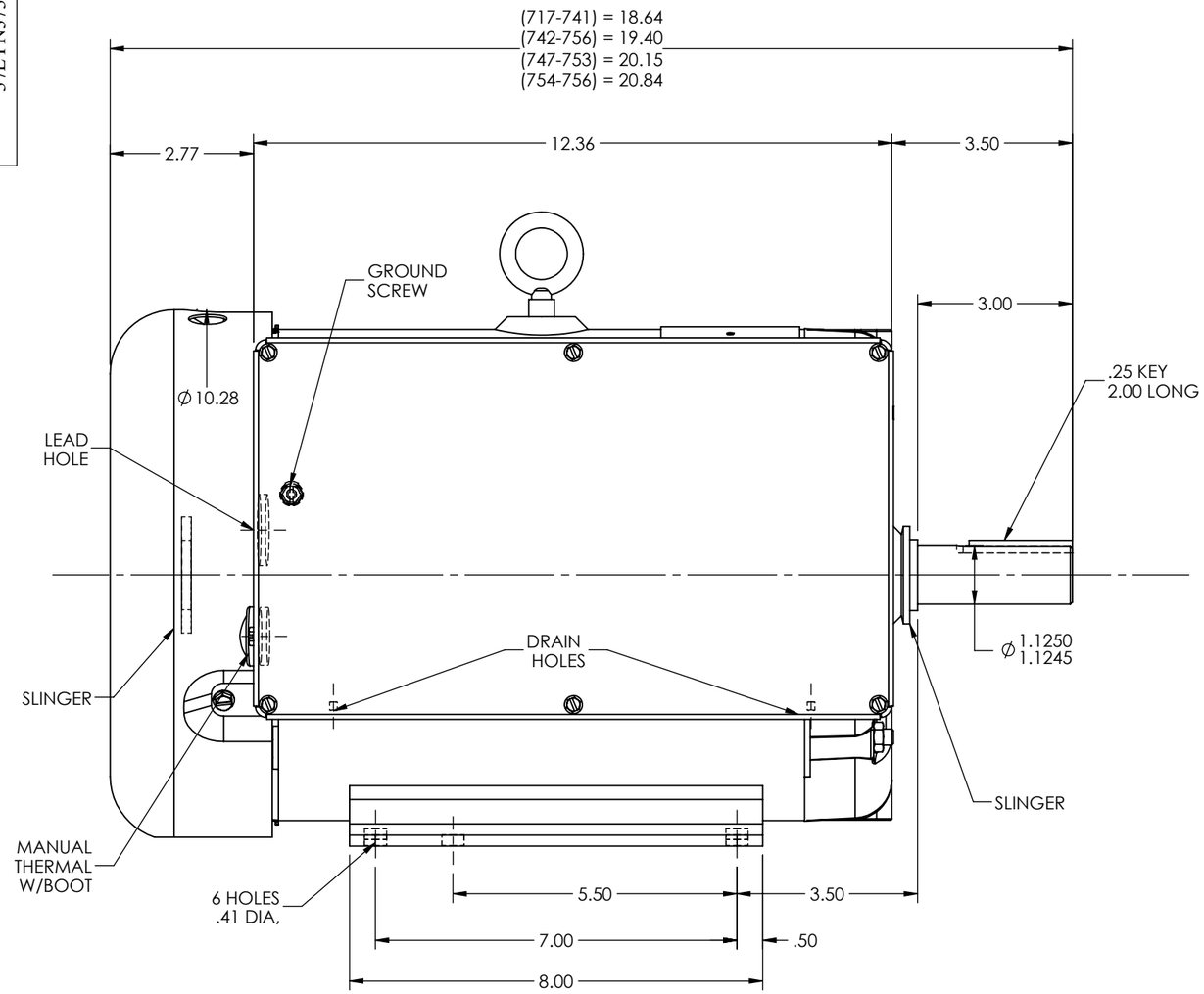

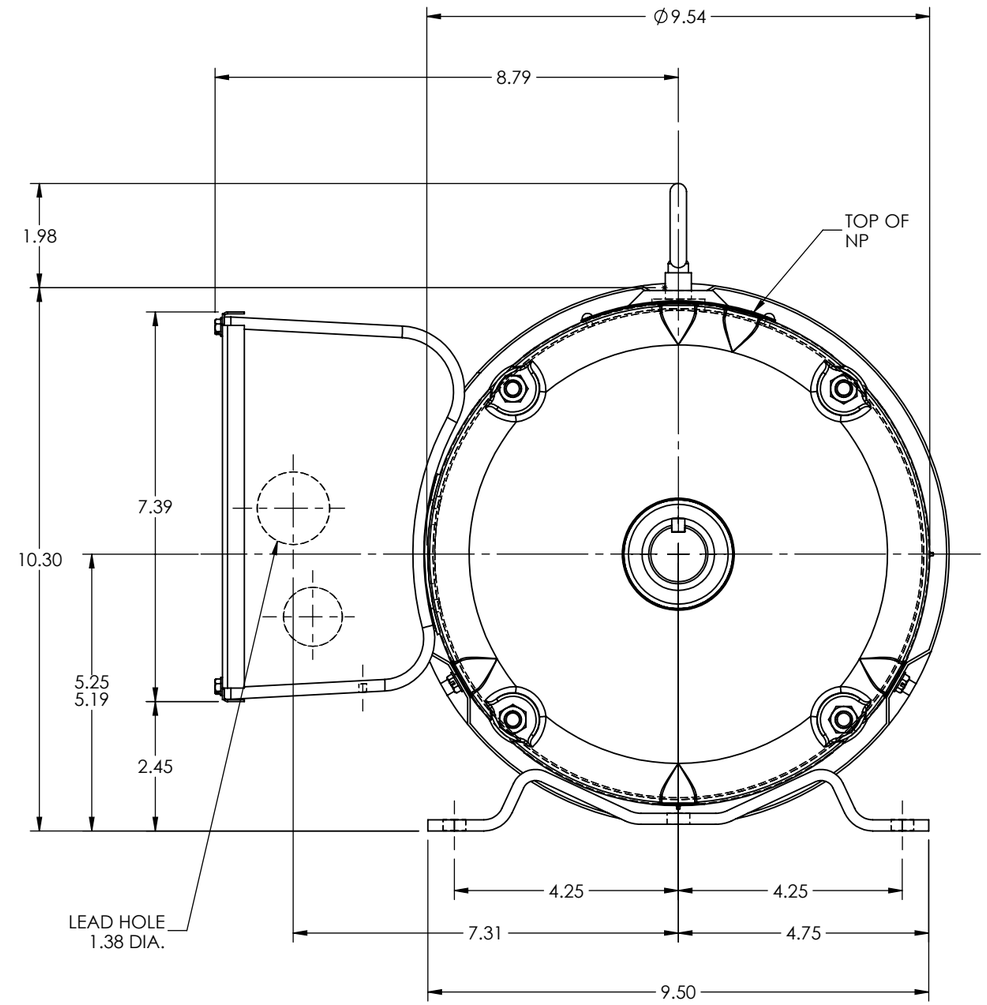

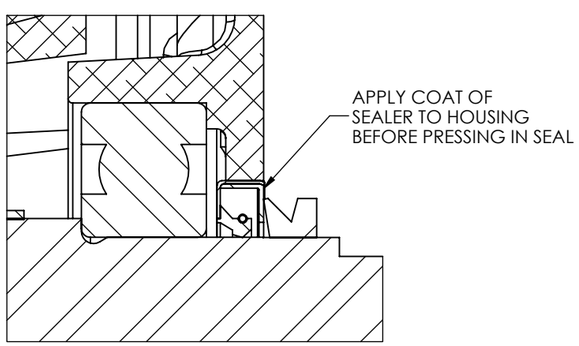

DRIVE END DETAIL

CUSTOMER IS RESPONSIBLE FOR DETERMINING THAT BALDOR'S PRODUCT WILL PERFORM SUITABLY IN THE INTENDED APPLICATION

REV. DESC: FIX SHAFT DIA DIMENSION			
REV: C	VERSION: 03	REVISED: 09:06:30 09/21/2021	TDR: 000001177455
MODEL NO. 37LYN373			REF: -
BY: USJOCUR			B

BALDOR

HORZ 213-5 TEFC LC FARM DUTY,LE MTO,FINNED ENDRING,TORQ

37LYN373