36LYQ170

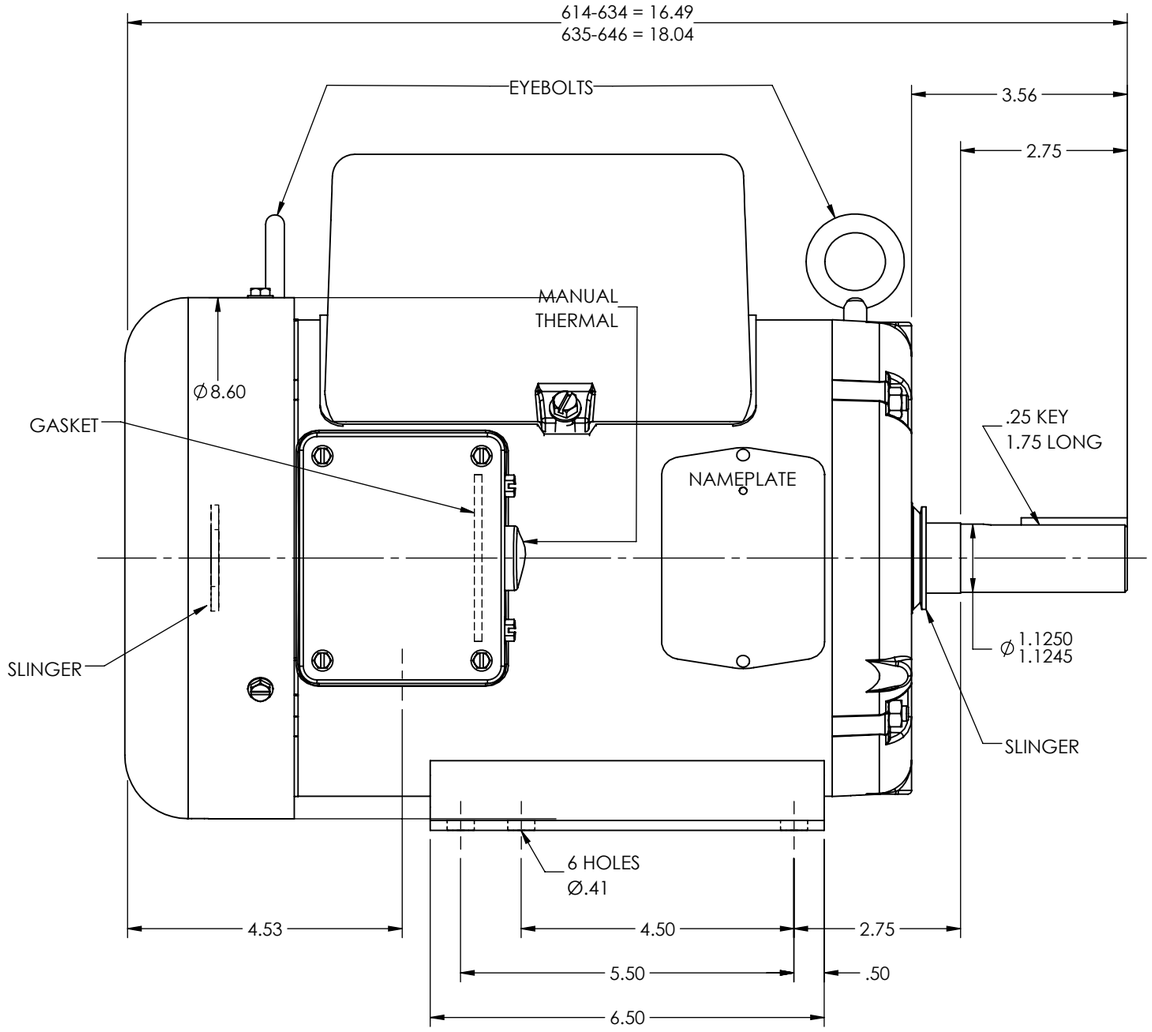

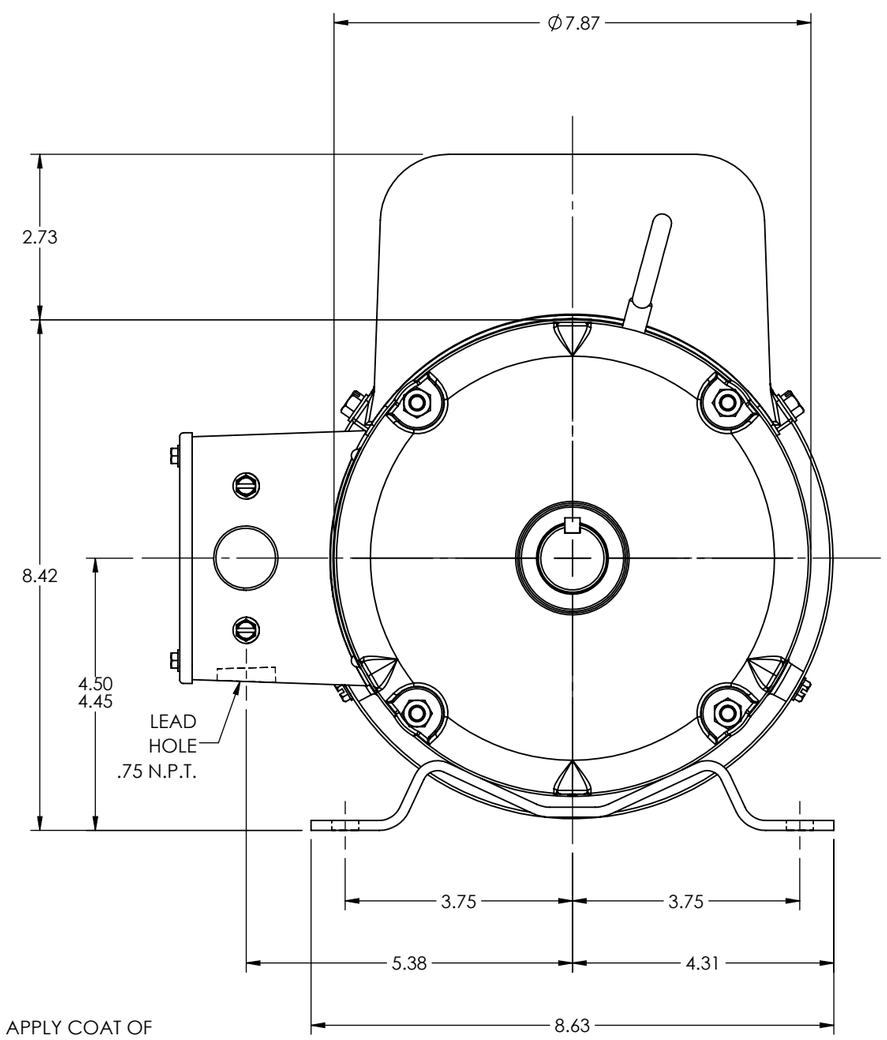

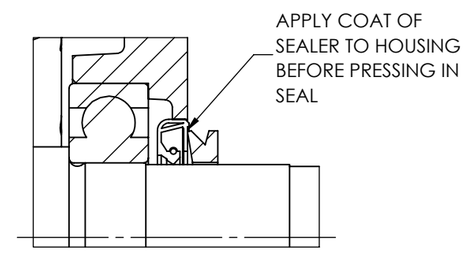

PULLEY END DETAIL

FARM DUTY

CUSTOMER IS RESPONSIBLE FOR DETERMINING THAT THE PRODUCT WILL PERFORM SUITABLY IN THE INTENDED APPLICATION

REV. DESC: FIX MATE ERRORS FOR UPDATING PER BOM			
REV: E	VERSION: 05	REVISED: 04:23:04 05/06/2022	TDR: 000001190082
MODEL NO. 36LYQ170			REF: -
BY: ENALEM0			B

BALDOR - RELIANCE®

HOR 182-4T TEFC LC W/1.25 MTO, SEAL PU END, SLD BRGS, TORQ

36LYQ170