35LYE2360

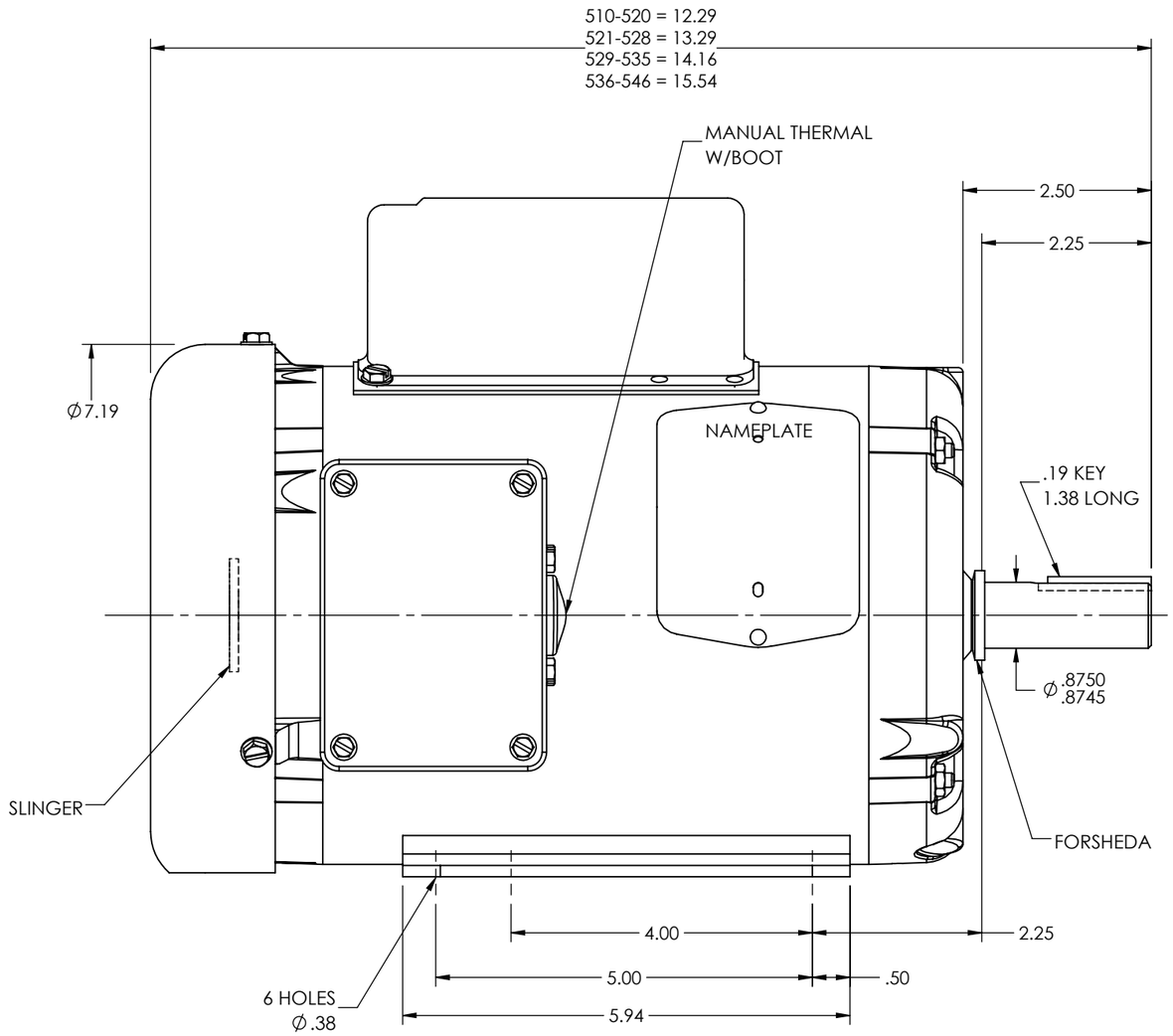

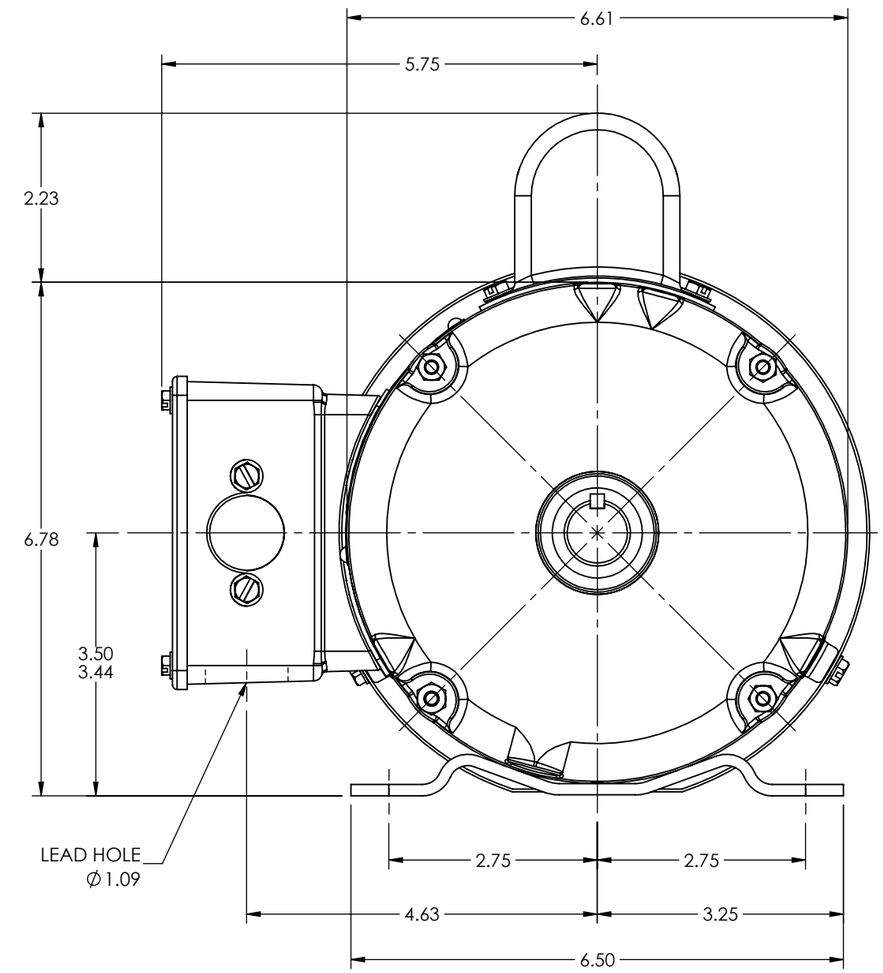

FARM DUTY MOTOR

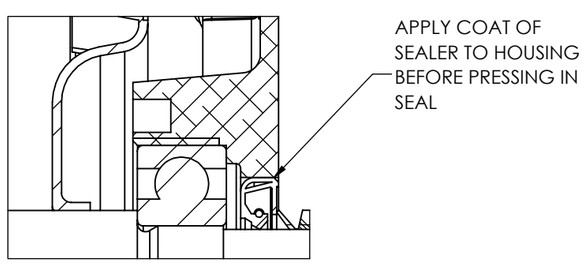

PULLEY END DETAIL

CUSTOMER IS RESPONSIBLE FOR DETERMINING THAT THE PRODUCT WILL PERFORM SUITABLY IN THE INTENDED APPLICATION

REV. DESC: UPDATE 3D MODEL BOM PER REV G, NO CHG TO 2D PRINT			
REV: D	VERSION: 04	REVISED: 09:20:23 03/09/2022	TDR: 000001187335
MODEL NO. 35LYE2360			REF: -
BY: USBUFRA			B

BALDOR - RELIANCE®

HOR 143-5T TEFC L, .75 MTO KOBX, 1.09 DIA. LD HL,SEAL PU END
SH 1 of 1

35LYE2360