Customer information packet

FDEM4110T-5

54M 4P TEFC HOR 324T FARM DUTY SE
Class - None
Division - Not Applicable

Copyright © All product information within this document is subject to ABB Motors and Mechanical Inc. copyright © protection, unless otherwise noted.
10/18/2026 7:01:39 AM

Specifications

Enclosure	TEFC
Frame	324T
Frame Material	Iron
Frequency	60.00 Hz
Haz Area Class and Group	None
Haz Area Division	Not Applicable
Motor Letter Type	Three Phase
Output @ Frequency	40.000 HP @ 60 HZ
Phase	3
Synchronous Speed @ Frequency	1800 RPM @ 60 HZ
Voltage @ Frequency	575.0 V @ 60 HZ
Agency Approvals	CURUSEEV NEMA PREMIUM NEMA PREMIUM (OLD LOGO)
Ambient Temperature	40 °C
Auxiliary Box	NO AUXILLARY BOX
Auxiliary Box Lead Termination	None
Base Indicator	Rigid
Bearing Grease Type	Polyrex EM (-20F +300F)
Blower	None
Current @ Voltage	39.000 A @ 575.0 V
Design Code	A
Drip Cover	No Drip Cover
Duty Rating	CONT
Efficiency @ 100% Load	94.1 %
Electrically Isolated Bearing	Not Electrically Isolated
Feedback Device	NO FEEDBACK
Front Shaft Indicator	None
Heater Indicator	No Heater
High Voltage Full Load Amps	39.0 a
Insulation Class	F
Inverter Code	Inverter Ready

Part Detail

Revision	H
Type	AC
Mech. spec.	12G994
Base	
Status	PRD/A
Elec. spec.	12WGY285
Layout	12LYG994
Eff. date	11-27-2024
CD Diagram	CD0006
Poles	04
Leads	3#8
Proprietary	False
Created date	06-14-2018

KVA Code	H
Lifting Lugs	Standard Lifting Lugs
Locked Bearing Indicator	Locked Bearing
Motor Lead Quantity/Wire Size	3 @ 8 AWG
Motor Lead Termination	Flying Leads
Motor Standards	NEMA
Motor Type	1254M
Mounting Arrangement	F1
Number of Poles	4
Overall Length	30.28 IN
Power Factor	82
Product Family	General Purpose
Pulley End Bearing Type	Sealed Bearing
Pulley Face Code	Standard
Pulley Shaft Indicator	Standard
Rodent Screen	None
Service Factor	1.15
Shaft Diameter	2.125 IN
Shaft Ground Indicator	No Shaft Grounding
Shaft Rotation	Reversible
Shaft Slinger Indicator	Shaft Slinger
Speed	1775 rpm
Speed Code	Single Speed
Starting Method	Direct on line
Thermal Device - Bearing	None
Thermal Device - Winding	None
Vibration Sensor Indicator	No Vibration Sensor
Winding Thermal 1	None
Winding Thermal 2	None

Nameplate

NP3126L								
CAT.NO.	FDEM4110T-5							
SPEC.	12G994Y285G1							
HP	40							
VOLTS	575							
AMP	39							
RPM	1775							
FRAME	324T		**HZ**	60			**PH**	3
SER.F.	1.15	**CODE**	H	**DES**	A	**CL**	F	
NEMA-NOM-EFF	94.1	**PF**	82					
RATING	40C AMB-CONT							
CC	010A							
DE	6312		**ODE**	6311				
ENCL	TEFC	**SN**						
	SFA 44							

AC Induction Motor Performance Data
Record # 30999
Typical performance - not guaranteed values

Winding: 12WGY285-R001	**Type:** 1254M	**Enclosure:** TEFC

Nameplate Data				**575 V, 60 Hz: Single Voltage Motor**	
Rated Output (HP)			40	**Full Load Torque**	118 LB-FT
Volts			575	**Start Configuration**	direct on line
Full Load Amps			39	**Breakdown Torque**	367 LB-FT
R.P.M.			1775	**Pull-up Torque**	174 LB-FT
Hz	60	**Phase**	3	**Locked-rotor Torque**	185 LB-FT
NEMA Design Code	A	**KVA Code**	H	**Starting Current**	267 A
Service Factor (S.F.)			1.15	**No-load Current**	15.6 A
NEMA Nom. Eff.	94.1	**Power Factor**	82	**Line-line Res. @ 25ºC**	0.232 Ω
Rating - Duty			40C AMB-CONT	**Temp. Rise @ Rated Load**	54°C
S.F. Amps				**Temp. Rise @ S.F. Load**	65°C
				Locked-rotor Power Factor	27.2
				Rotor inertia	7.19 lb-ft²

Load Characteristics 575 V, 60 Hz, 40 HP

% of Rated Load	**25**	**50**	**75**	**100**	**125**	**150**	**S.F.**
Power Factor	46	67	77	82	84	85	83
Efficiency	90.1	93.6	94.3	94.3	94.2	93.3	94.2
Speed	1795	1790	1785	1780	1774	1767	1776
Line amperes	18.3	24.1	31.1	38.7	47.6	56.3	44

ABB Motors and Mechanical Inc.

WINDING # 12WGY285

Typical performance - not guaranteed values.

40 HP 3 PH 60 HZ 1775 RPM 575 V 1254M

TORQUES(LB-FT): PO=367 PU=174 LR=185 LRA=267

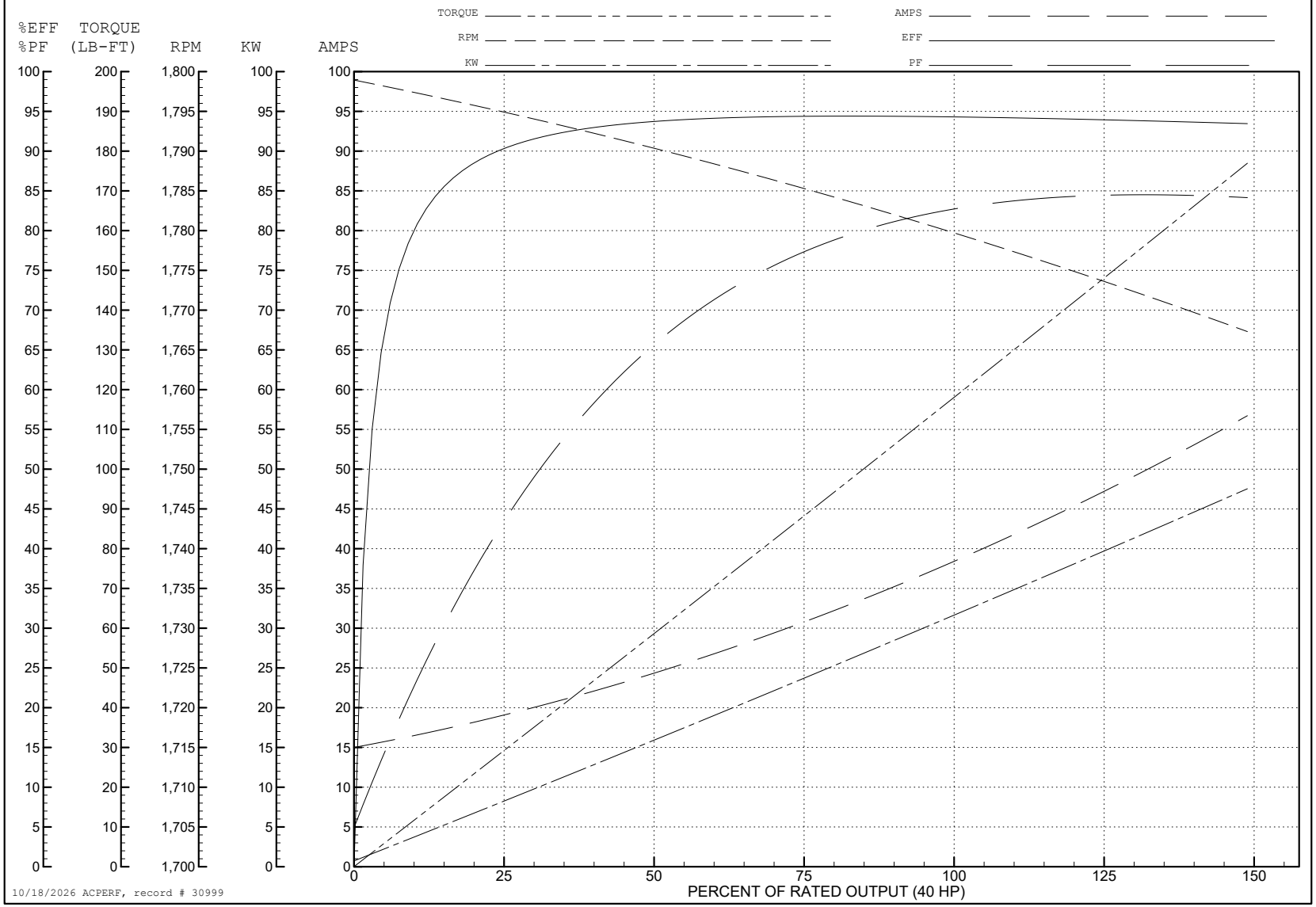

10/18/2026 ACPERF, record # 30999

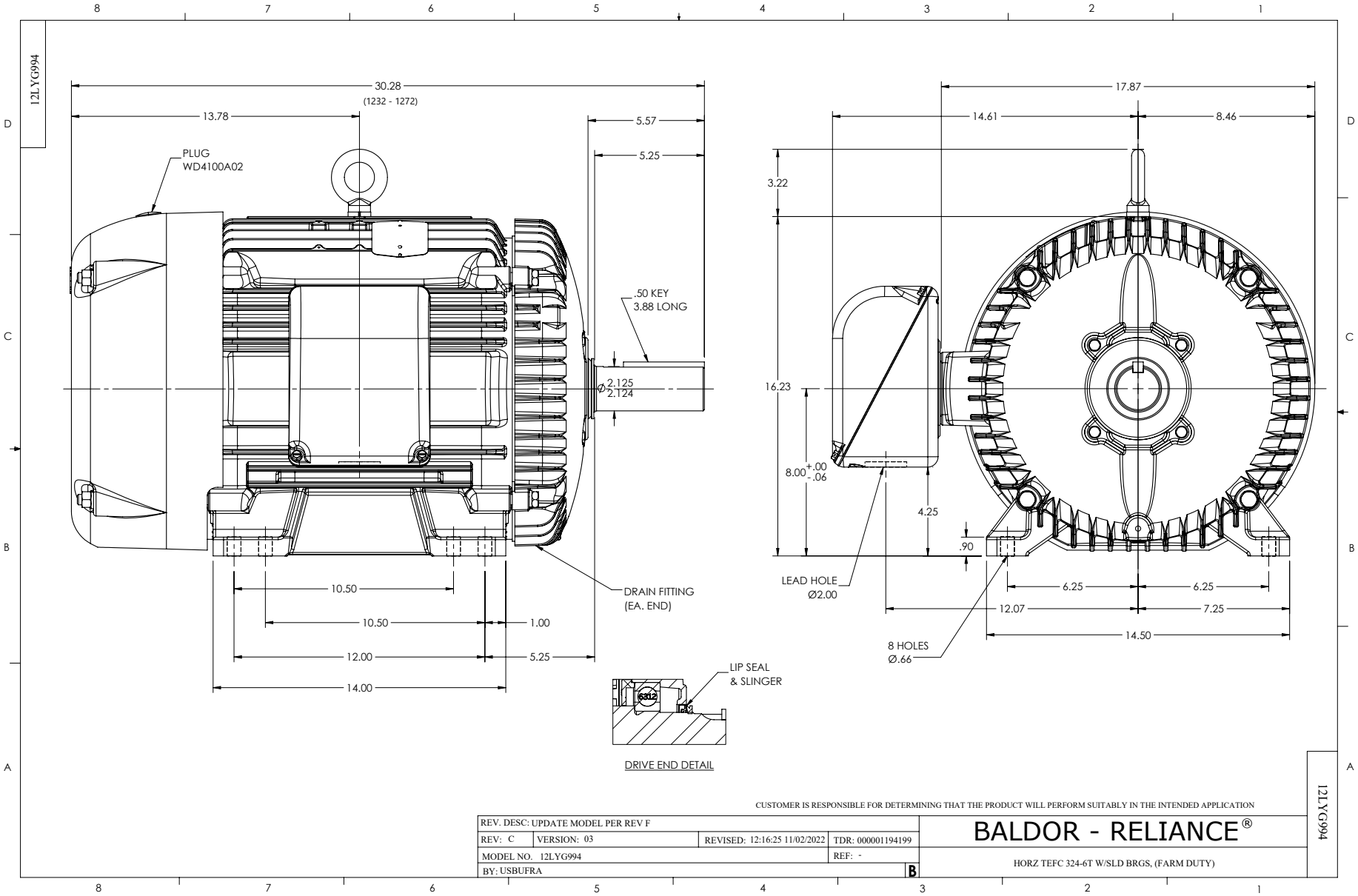
12LYG994
30.28
(1232 - 1272)
13.78
5.57
5.25
PLUG
WD4100A02
.50 KEY
3.88 LONG
2.125
2.124
10.50
10.50
1.00
12.00
5.25
14.00
DRAIN FITTING
(EA. END)
LIP SEAL
& SLINGER
DRIVE END DETAIL
17.87
14.61
8.46
3.22
16.23
8.00 +.00 -.06
4.25
.90
LEAD HOLE
Ø2.00
6.25
6.25
12.07
7.25
14.50
8 HOLES
Ø.66
CUSTOMER IS RESPONSIBLE FOR DETERMINING THAT THE PRODUCT WILL PERFORM SUITABLY IN THE INTENDED APPLICATION
REV. DESC: UPDATE MODEL PER REV F
REV: C
VERSION: 03
REVISED: 12:16:25 11/02/2022
TDR: 000001194199
MODEL NO. 12LYG994
REF: -
BY: USBUFRA
B
BALDOR - RELIANCE®
HORZ TEFC 324-6T W/SLD BRGS, (FARM DUTY)
12LYG994

CD0006

TYPICAL WYE–CONNECTED MOTOR

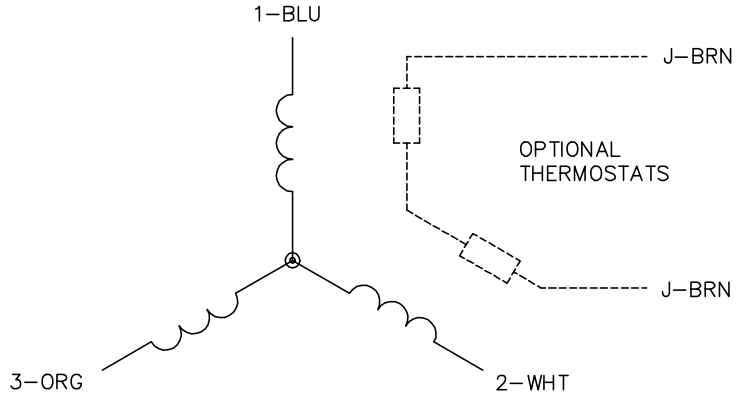

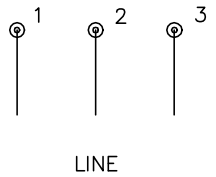

TYPICAL DELTA–CONNECTED MOTOR

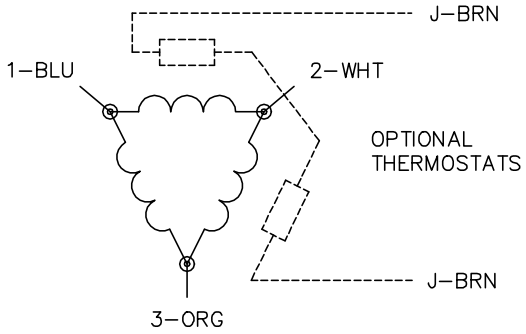

NOTES:

1. THREE LEAD MOTOR MAY BE EITHER WYE CONNECTED OR DELTA CONNECTED.
2. INTERCHANGE ANY TWO LINE LEADS TO REVERSE ROTATION.
3. OPTIONAL THERMOSTATS ARE PROVIDED WHEN SPECIFIED.
4. ACTUAL NUMBER OF INTERNAL PARALLEL CIRCUITS MAY VARY.
5. LEAD COLORS ARE OPTIONAL. LEADS MUST BE NUMBERED AS SHOWN.

CD0006

REV. DESC: ADD CLASS CONN00000007			BALDOR - RELIANCE®
REV. LTR: E	VERSION: 01	TDR: 000001099922	
FILE: \AAA\00005\141	REVISED: 10:24:49 02/19/2019	BY: ENBRIR0	3PH, SV, 3 LEADS, WYE OR DELTA CONNECTED
MTL: –			SH 1 of 1