10LYJ526

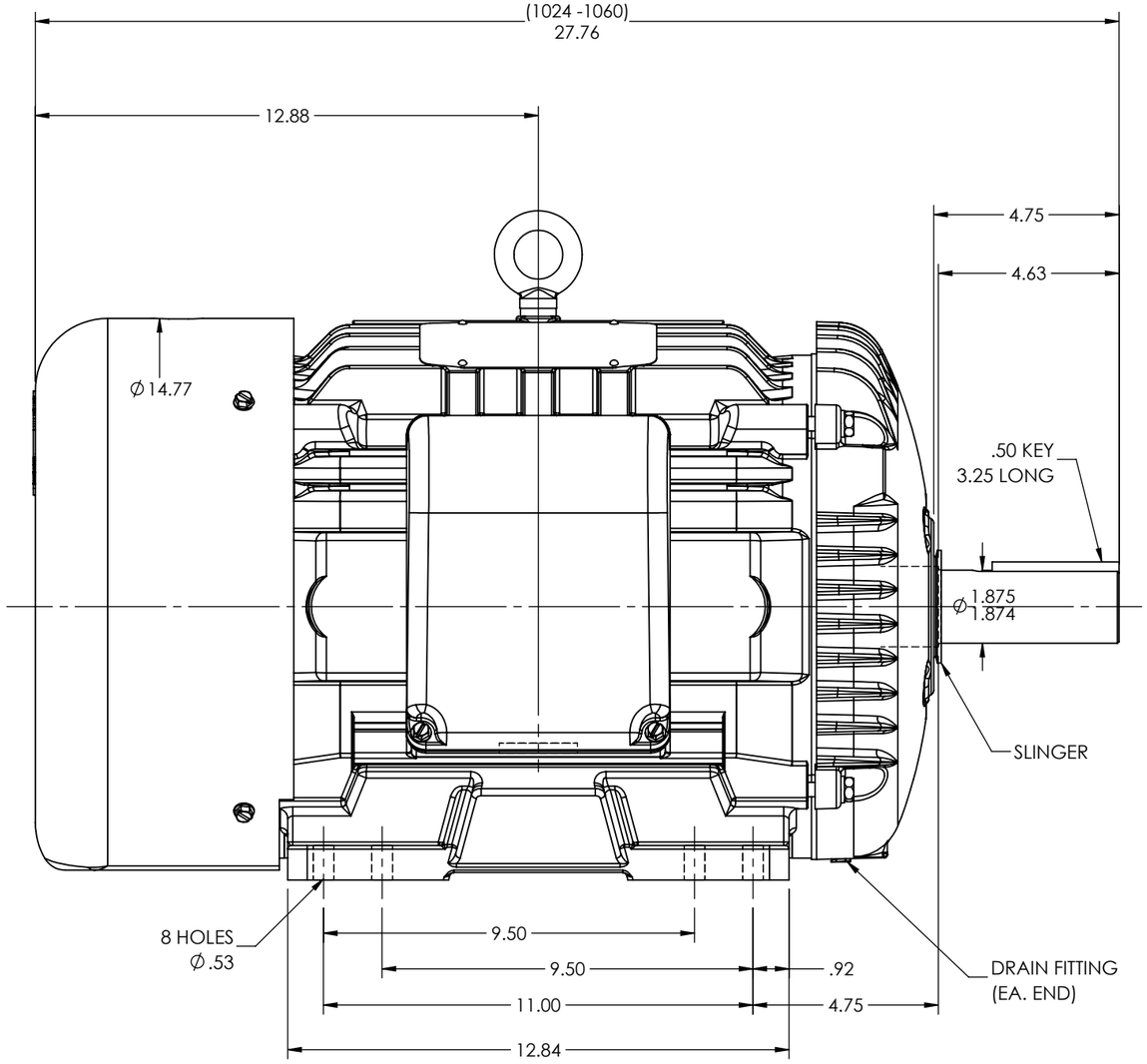

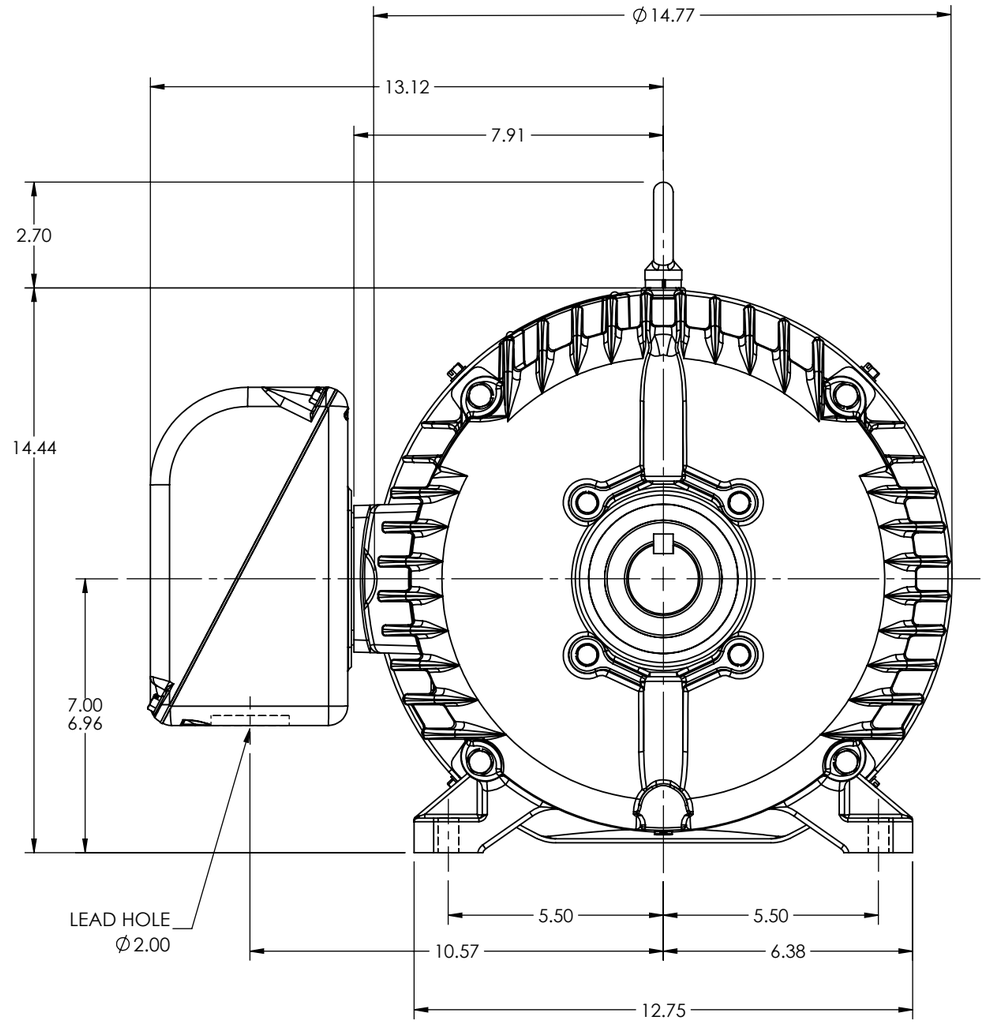

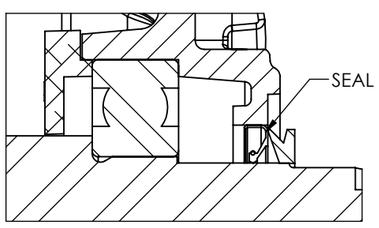

DRIVE END DETAIL

REV. DESC: REPLACE RB3001A01 W/ RB3001A27			
REV: D	VERSION: 04	REVISED: 11:11:57 07/19/2021	TDR: 000001173274
MODEL NO. 10LYJ526			
BY: ENALEM0			B

BALDOR - RELIANCE®

HORZ TEFC 284-6T W/SLD BRGS, LIP SEAL, SLINGER (FARM DUTY)

10LYJ526