37LYH872

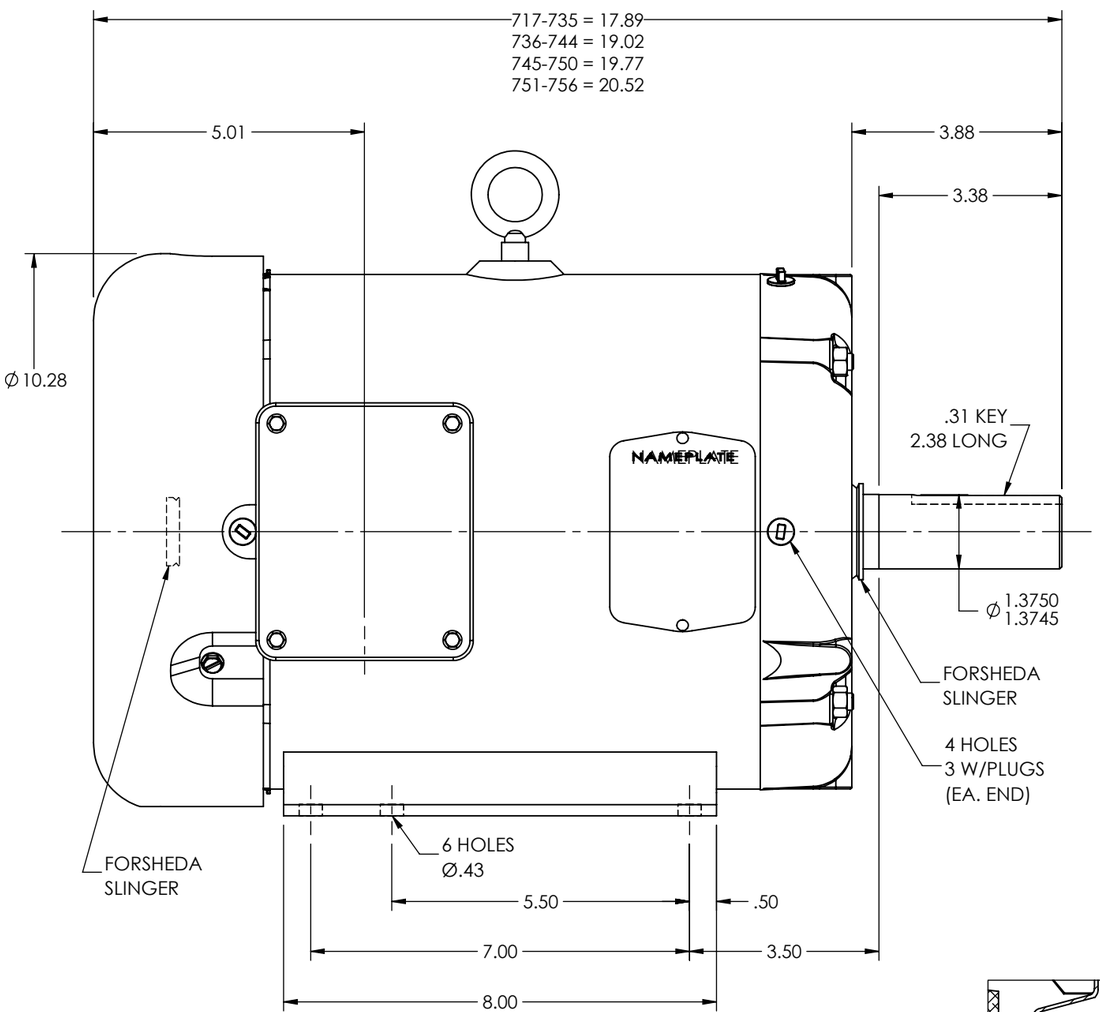

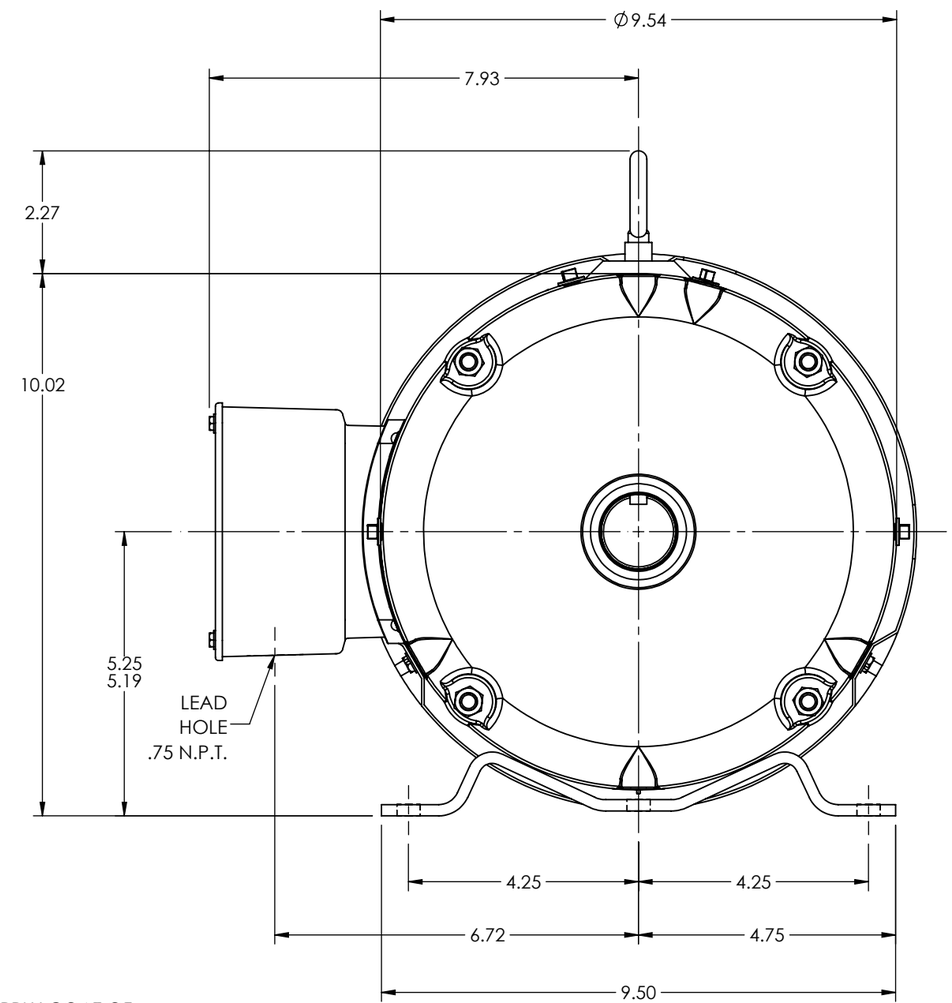

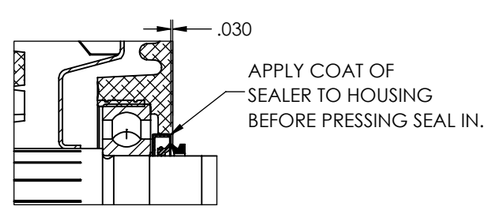

PULLEY END DETAIL

CUSTOMER IS RESPONSIBLE FOR DETERMINING THAT THE PRODUCT WILL PERFORM SUITABLY IN THE INTENDED APPLICATION

REV. DESC: CONVERSION OF ACAD TO SWD INOPC PKG 19			
REV: C	VERSION: 03	REVISED: 10:58:16 10/11/2022	TDR: 000001197758
MODEL NO. 37LYH872			REF: -
BY: ENALEM0			B

BALDOR - RELIANCE®

STD HORZ 213-5T TEFC 37M WD

37LYH872