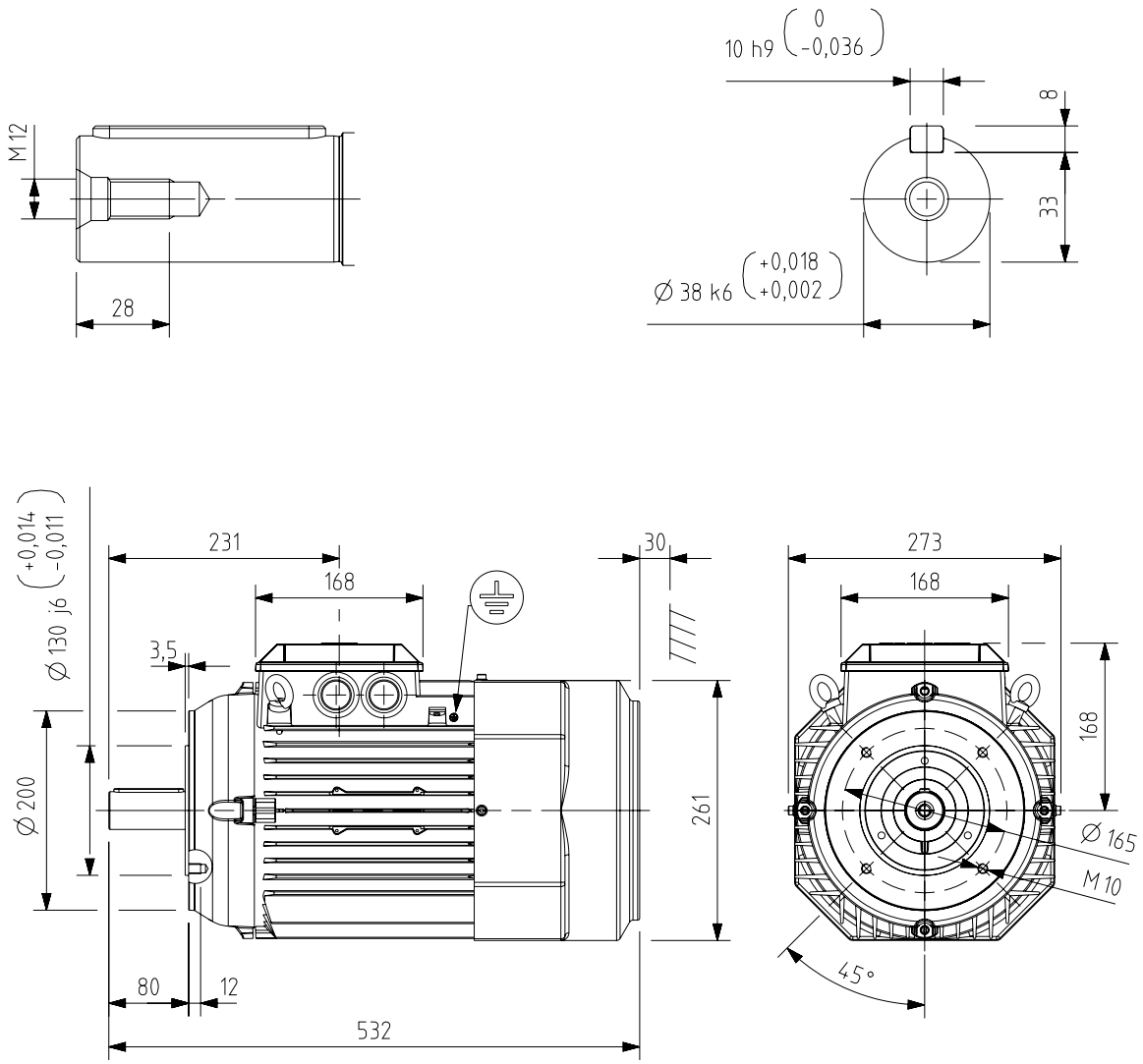

Additional information:

Dimension Print	Motor Type: M3BP 132SM 2-8 B14, V18, V19 FT165 M3GP 132SM 2-8 B14, V18, V19 FT165	Document No: 3GZF500013-40 H 13 BP 132 A
Description: STANDARD IE3 SQUIRREL CAGE MOTOR		

Unit:	Motors and Generators	Issued by:	Jeff Wang	Replaces:	
Date:	08.12.2016	Approved by:	Adam Zhu	Replaced by:	

ABB Oy	Customer Reference:	ABB