36LYM718

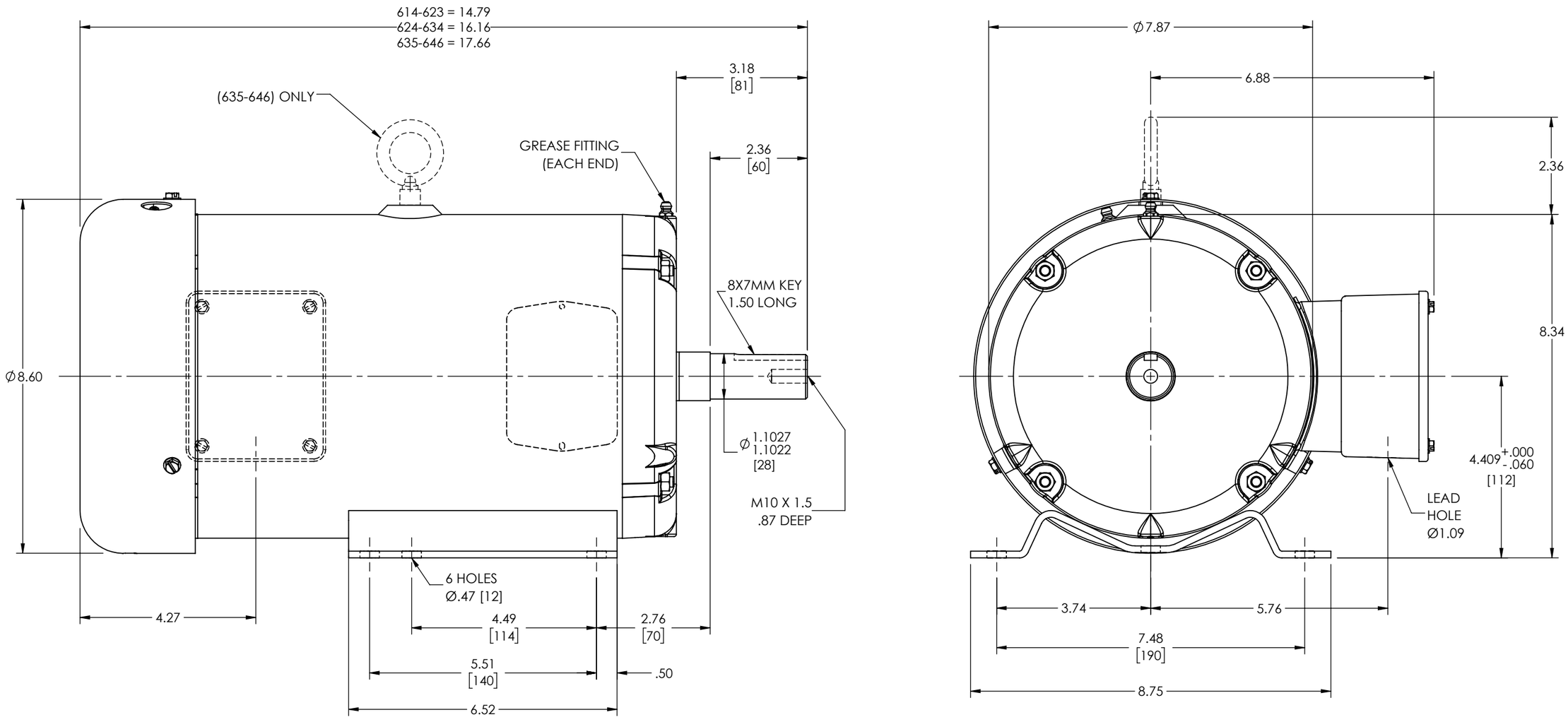

CUSTOMER IS RESPONSIBLE FOR DETERMINING THAT THE PRODUCT WILL PERFORM SUITABLY IN THE INTENDED APPLICATION

REV. DESC: LOAD OF 2D TO 3D CONVERSION FROM INOPC - PKG 37			
REV: A	VERSION: 01	REVISED: 10:46:28 09/23/2019	TDR: 000001120280
MODEL NO. 36LYM718			REF: -
BY: ENBILT0			B

BALDOR - RELIANCE®

HORZ D112S-M TEFC M F2, W/M10 TAP SHAFT

36LYM718