ABB BALDOR RELIANCE

Customer information packet

EM7544T-I

5HP, 1750RPM, 3PH, 60HZ, 182T, 0642M, XPFC, F1
Class - CLI GP D; CLII GP E,F,G
Division - Division I

Copyright © All product information within this document is subject to ABB Motors and Mechanical Inc. copyright © protection, unless otherwise noted.
11/23/2026 4:14:06 AM

Specifications

Enclosure	XPFC
Frame	184T
Frame Material	Iron
Frequency	60.00 Hz
Haz Area Class and Group	CLI GP D; CLII GP E,F,G
Haz Area Division	Division I
Motor Letter Type	Three Phase
Output @ Frequency	5.000 HP @ 60 HZ
Phase	3
Synchronous Speed @ Frequency	1800 RPM @ 60 HZ
Voltage @ Frequency	230.0 V @ 60 HZ
	460.0 V @ 60 HZ
Agency Approvals	UR
	CSA
	CSA EEV
Ambient Temperature	40 °C
Auxiliary Box	NO AUXILLARY BOX
Auxiliary Box Lead Termination	None
Base Indicator	Rigid
Bearing Grease Type	Polyrex EM (-20F +300F)
Blower	None
Current @ Voltage	6.600 A @ 460.0 V
	14.000 A @ 208.0 V
	13.200 A @ 230.0 V
Design Code	B
Drip Cover	No Drip Cover
Duty Rating	CONT
Efficiency @ 100% Load	89.5 %
Electrically Isolated Bearing	Not Electrically Isolated
Feedback Device	NO FEEDBACK
Front Face Code	Standard
Front Shaft Indicator	None

Part Detail

Revision	N
Type	AC
Mech. spec.	06J017
Base	
Status	PRD/A
Elec. spec.	06WGX182
Layout	06LYJ017
Eff. date	12-26-2024
CD Diagram	CD0005
Poles	04
Leads	9#16
Proprietary	False
Created date	07-23-2015

Haz Area Temp Code	T3C
Heater Indicator	No Heater
High Voltage Full Load Amps	6.6 a
Insulation Class	F
Inverter Code	Not Inverter
KVA Code	J
Lifting Lugs	Standard Lifting Lugs
Locked Bearing Indicator	Locked Bearing
Motor Lead Exit	Ko Box
Motor Lead Quantity/Wire Size	9 @ 16 AWG
Motor Lead Termination	Flying Leads
Motor Standards	NEMA
Motor Type	X0642M
Mounting Arrangement	F1
Number of Poles	4
Overall Length	17.59 IN
Power Factor	79
Product Family	General Purpose
Pulley End Bearing Type	Ball
Pulley Face Code	Standard
Pulley Shaft Indicator	Standard
Rodent Screen	None
RoHS Status	ROHS NON-COMPLIANT
Service Factor	1.15
Shaft Diameter	1.125 IN
Shaft Extension Location	Pulley End
Shaft Ground Indicator	No Shaft Grounding
Shaft Rotation	Reversible
Shaft Slinger Indicator	No Slinger
Speed	1750 rpm
Speed Code	Single Speed
Starting Method	Direct on line
Thermal Device - Bearing	None
Thermal Device - Winding	Normally Closed Thermostat

Vibration Sensor Indicator	No Vibration Sensor
Winding Thermal 1	None
Winding Thermal 2	None

Nameplate

NP1044XPSLEV											
NO.						**CC**	010A				
SER.						**TEMP CODE**	T3C				
SPEC.	06J017X182G1										
CAT.NO.											
HP	5										
VOLTS	230/460										
AMPS	13.2/6.6										
RPM	1750					**MOTOR WEIGHT**	152				
HERTZ	60	**PH**	3	**CL**	F	**DE BRG**	6206				
SER.F.	1.15	**DES**	B	**CODE**	J	**ODE BRG**	6205				
FRAME	184T	**GREASE**	POLYREX EM								
RATING	40C AMB-CONT										
				NEMA-NOM-EFF		89.5	**PF**	79			

AC Induction Motor Performance Data
Record # 34667
Typical performance - not guaranteed values

Winding: 06WGX182-R013	**Type:** 0642M	**Enclosure:** TEFC

Nameplate Data				**460 V, 60 Hz: High Voltage Connection**	
Rated Output (HP)			5	**Full Load Torque**	15 LB-FT
Volts			230/460	**Start Configuration**	direct on line
Full Load Amps			13.2/6	**Breakdown Torque**	53.9 LB-FT
R.P.M.			1750	**Pull-up Torque**	22.4 LB-FT
Hz	60	**Phase**	3	**Locked-rotor Torque**	31.8 LB-FT
NEMA Design Code	B	**KVA Code**	J	**Starting Current**	46.6 A
Service Factor (S.F.)			1.15	**No-load Current**	3.02 A
NEMA Nom. Eff.	89.5	**Power Factor**	79	**Line-line Res. @ 25ºC**	2.63 Ω
Rating - Duty			40C AMB-CONT	**Temp. Rise @ Rated Load**	53°C
S.F. Amps				**Temp. Rise @ S.F. Load**	65°C
				Locked-rotor Power Factor	40.5
				Rotor inertia	0.391 lb-ft²

Load Characteristics 460 V, 60 Hz, 5 HP

% of Rated Load	**25**	**50**	**75**	**100**	**125**	**150**	**S.F.**
Power Factor	41	63	75	81	84	85	81
Efficiency	85.2	89.8	90.4	89.8	88.4	86.9	88.6
Speed	1789	1777	1765	1752	1737	1721	1739
Line amperes	3.35	4.14	5.21	6.45	7.91	9.47	7.52

ABB Motors and Mechanical Inc.

WINDING # 06WGX182

5 HP 3 PH 60 HZ 1750 RPM 460 V 0642M

Typical performance - not guaranteed values.

TORQUES(LB-FT): PO=53.9 PU=22.4 LR=31.8 LRA=46.6

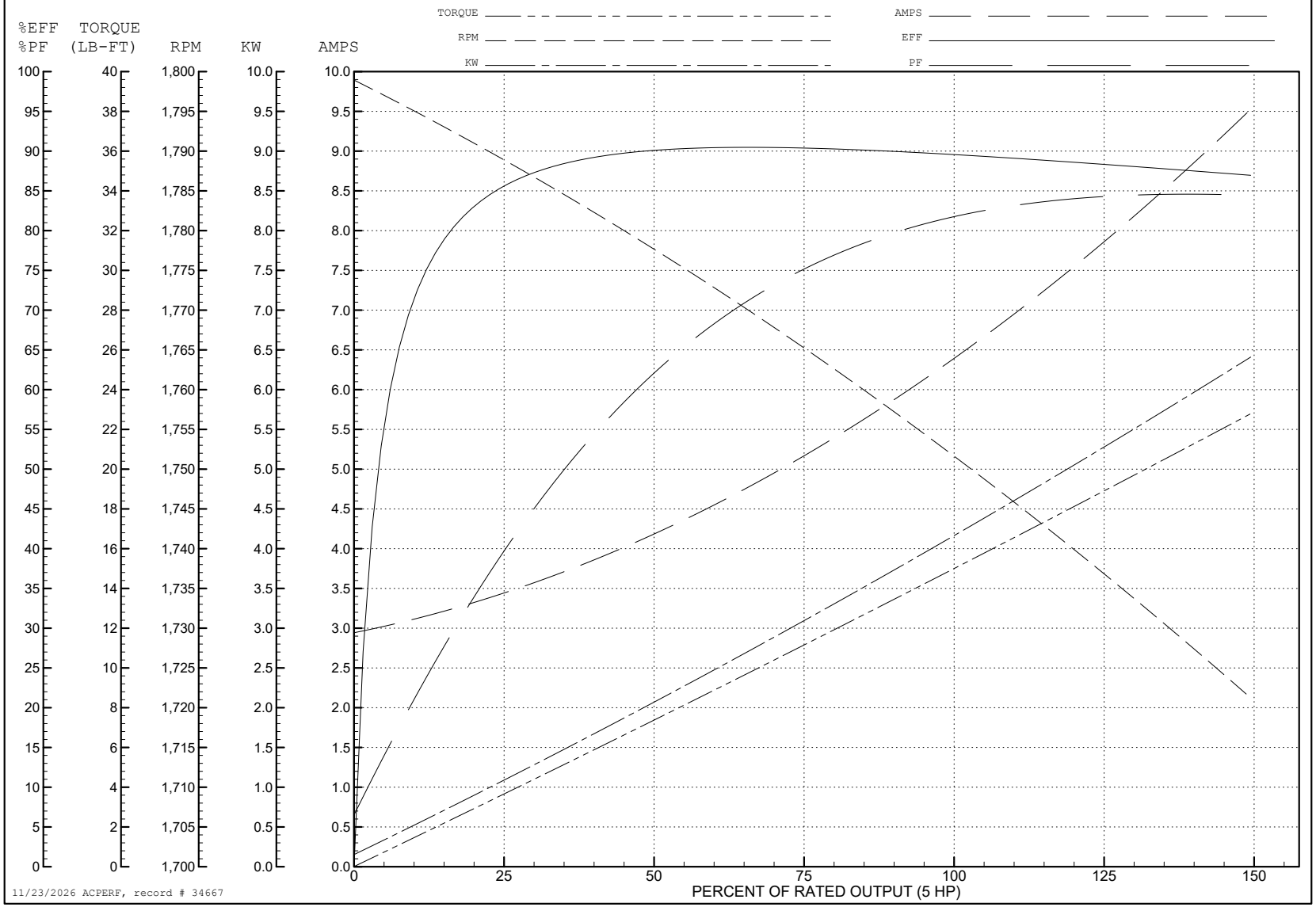

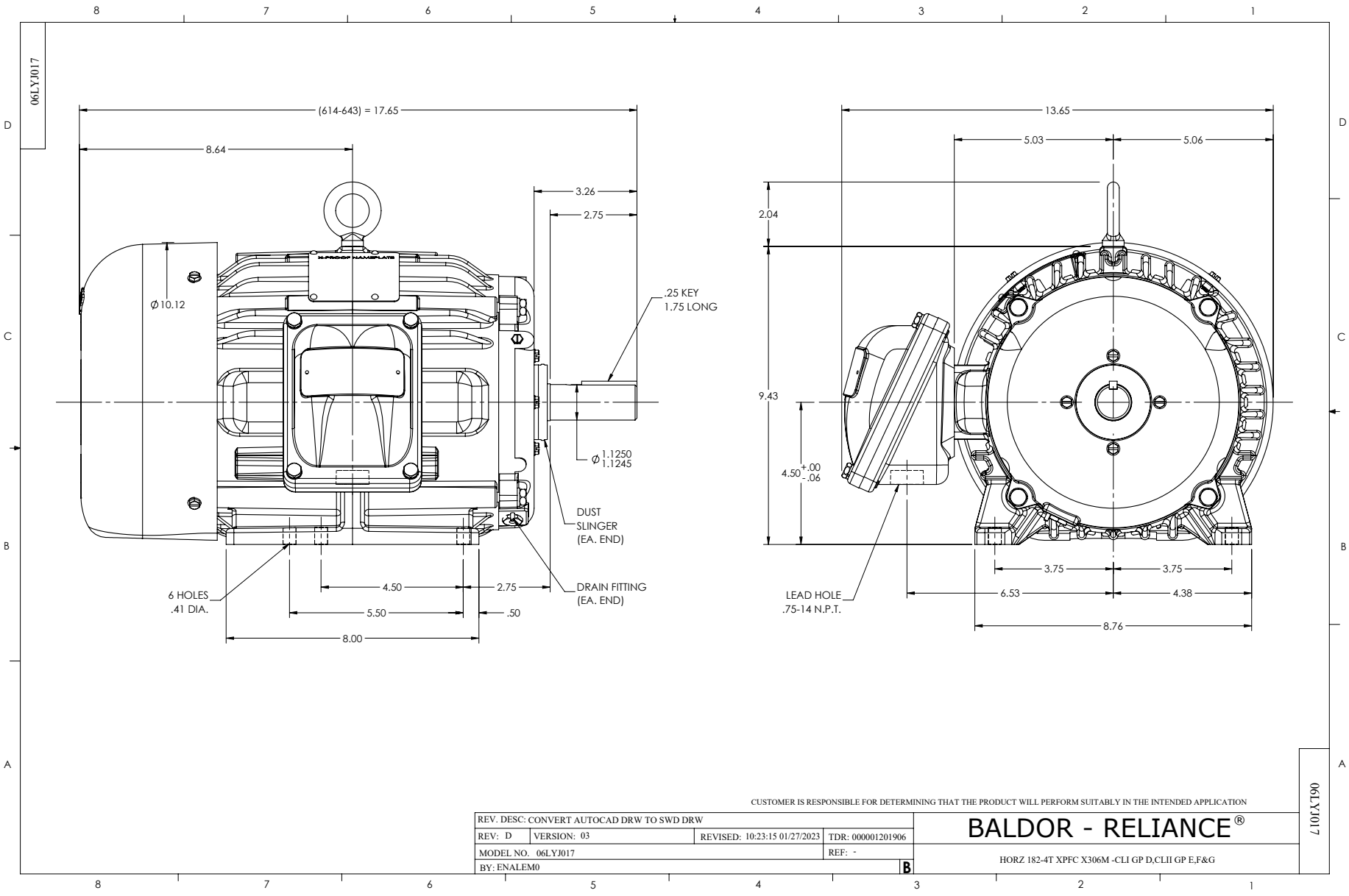
06LYJ017
(614-643) = 17.65
8.64
3.26
2.75
Ø10.12
.25 KEY
1.75 LONG
Ø 1.1250
1.1245
DUST
SLINGER
(EA. END)
DRAIN FITTING
(EA. END)
6 HOLES
.41 DIA.
4.50
2.75
5.50
.50
8.00
13.65
5.03
5.06
2.04
9.43
4.50 +.00 -.06
3.75
3.75
LEAD HOLE
.75-14 N.P.T.
6.53
4.38
8.76
CUSTOMER IS RESPONSIBLE FOR DETERMINING THAT THE PRODUCT WILL PERFORM SUITABLY IN THE INTENDED APPLICATION
REV. DESC: CONVERT AUTOCAD DRW TO SWD DRW
REV: D
VERSION: 03
REVISED: 10:23:15 01/27/2023
TDR: 000001201906
MODEL NO. 06LYJ017
REF: -
BY: ENALEM0
B
BALDOR - RELIANCE®
HORZ 182-4T XPFC X306M -CLI GP D,CLII GP E,F&G
06LYJ017

CD0005

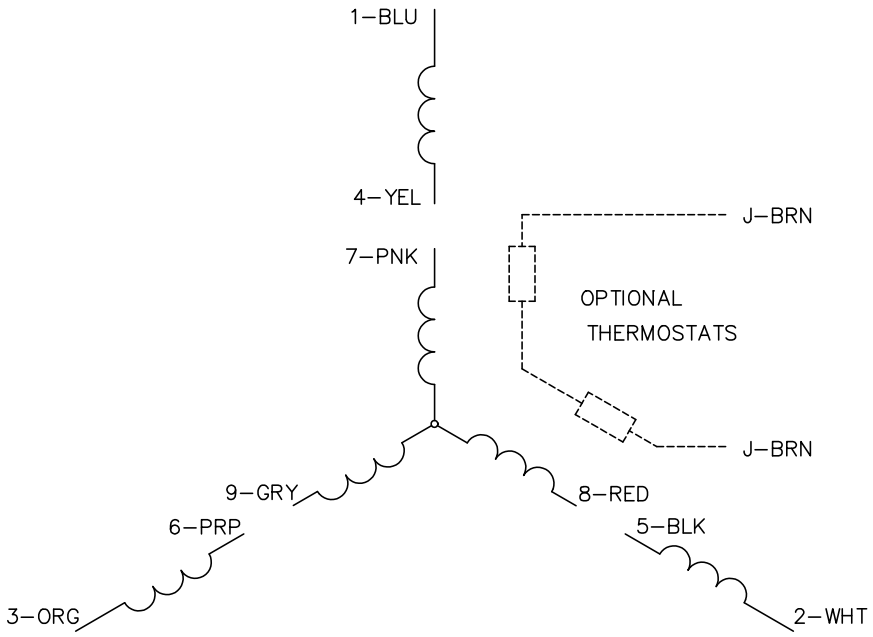

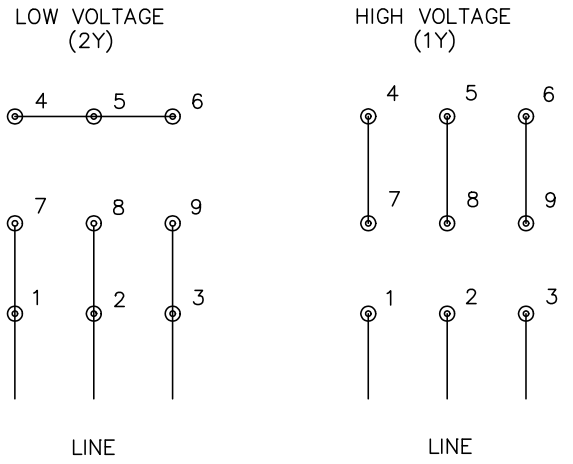

NOTES:

1. INTERCHANGE ANY TWO LINE LEADS TO REVERSE ROTATION.
2. OPTIONAL THERMOSTATS ARE PROVIDED WHEN SPECIFIED.
3. ACTUAL NUMBER OF INTERNAL PARALLEL CIRCUITS MAY BE A MULTIPLE OF THOSE SHOWN ABOVE.
4. LEAD COLORS ARE OPTIONAL. LEADS MUST ALWAYS BE NUMBERED AS SHOWN.

CD0005

REV. DESC: REVISE TO SHOW OPTIONAL COLORS			BALDOR ELECTRIC Co.
REV. LTR: E	BY: JLP	REVISED: 01/19/99 10:15	TDR: 0171435
CD0005		FILE: AAA00005140	MDL: –
		MTL: –	3PH, DV, 9 LEADS