06LYJ017

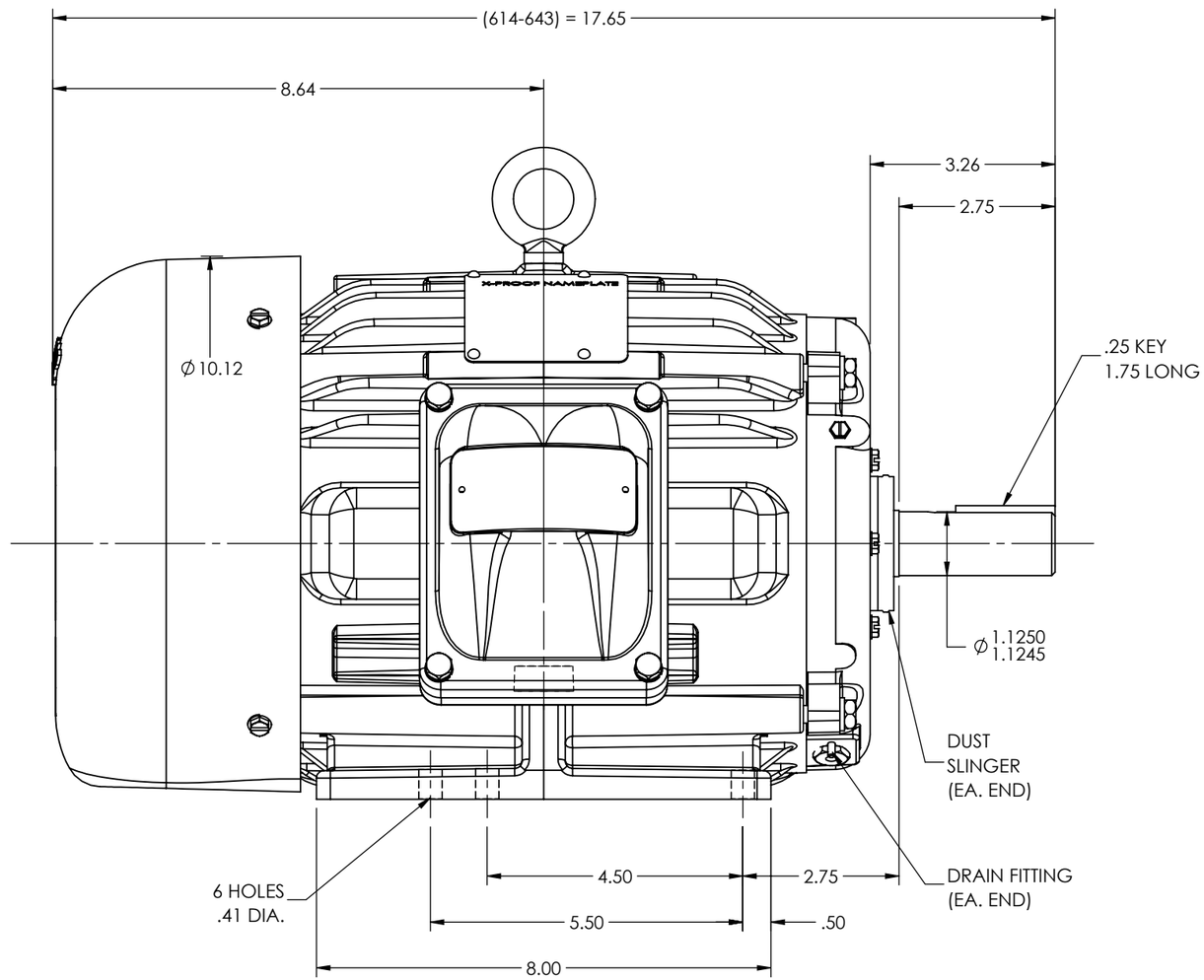

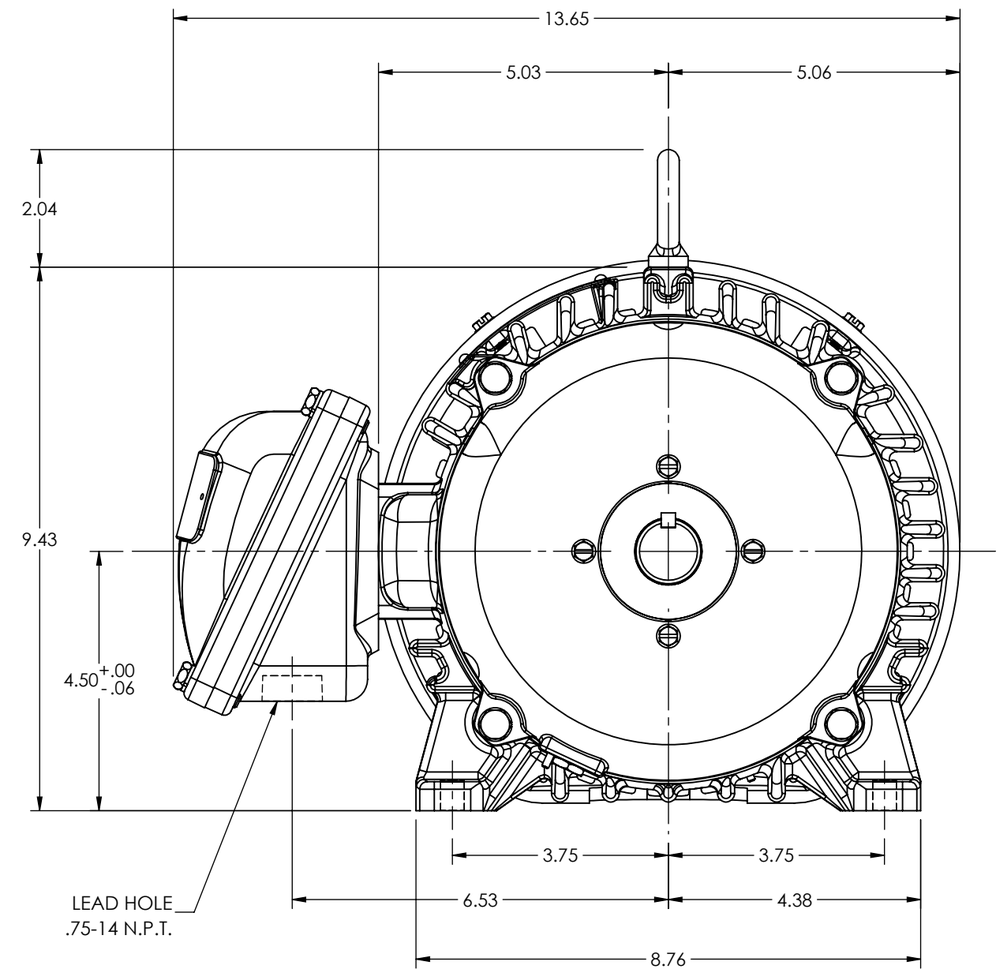

CUSTOMER IS RESPONSIBLE FOR DETERMINING THAT THE PRODUCT WILL PERFORM SUITABLY IN THE INTENDED APPLICATION

REV. DESC: CONVERT AUTOCAD DRW TO SWD DRW			
REV: D	VERSION: 03	REVISED: 10:23:15 01/27/2023	TDR: 000001201906
MODEL NO. 06LYJ017			REF: -
BY: ENALEM0			B

BALDOR - RELIANCE®

HORZ 182-4T XPFC X306M -CLI GP D,CLII GP E,F&G

06LYJ017