ABB BALDOR RELIANCE

Customer information packet

EM7114T-C

1//.75HP, 1760//1460RPM, 3PH, 60//50HZ, 143T
Class - CLI GP C,D; CLII GP F,G
Division - Division I

Copyright © All product information within this document is subject to ABB Motors and Mechanical Inc. copyright © protection, unless otherwise noted.
11/29/2026 1:50:13 PM

Specifications

Enclosure	XPFC
Frame	143T
Frame Material	Iron
Frequency	50.00 Hz
	60.00 Hz
Haz Area Class and Group	CLI GP C,D; CLII GP F,G
Haz Area Division	Division I
Motor Letter Type	Three Phase
Output @ Frequency	.750 HP @ 50 HZ
	1.000 HP @ 60 HZ
Phase	3
Synchronous Speed @ Frequency	1800 RPM @ 60 HZ
Voltage @ Frequency	380.0 V @ 50 HZ
	230.0 V @ 60 HZ
	190.0 V @ 50 HZ
	460.0 V @ 60 HZ
Agency Approvals	UL
	CSA
	UR
Ambient Temperature	40 °C
Auxiliary Box	NO AUXILLARY BOX
Auxiliary Box Lead Termination	None
Base Indicator	Rigid
Bearing Grease Type	Polyrex EM (-20F +300F)
Blower	None
Current @ Voltage	3.000 A @ 230.0 V
	3.100 A @ 208.0 V
	3.000 A @ 190.0 V
	1.500 A @ 460.0 V
	1.400 A @ 380.0 V
Design Code	B
Drip Cover	No Drip Cover

Part Detail

Revision	P
Type	AC
Mech. spec.	05E347
Base	
Status	INA/A
Elec. spec.	05WGX122
Layout	05LYE347
Eff. date	03-09-2021
CD Diagram	CD0005
Poles	04
Leads	9#18
Proprietary	False
Created date	08-03-2010

Duty Rating	CONT
Efficiency @ 100% Load	85.5 %
Electrically Isolated Bearing	Not Electrically Isolated
Feedback Device	NO FEEDBACK
Front Face Code	Standard
Front Shaft Indicator	None
Haz Area Temp Code	T4
Heater Indicator	No Heater
High Voltage Full Load Amps	1.4 a
Insulation Class	B
Inverter Code	Not Inverter
KVA Code	L
Lifting Lugs	Standard Lifting Lugs
Locked Bearing Indicator	No Locked Bearing
Motor Lead Exit	Ko Box
Motor Lead Quantity/Wire Size	9 @ 18 AWG
Motor Lead Termination	Flying Leads
Motor Standards	NEMA
Motor Type	X0518M
Mounting Arrangement	F1
Number of Poles	4
Overall Length	16.28 IN
Power Factor	71
Product Family	General Purpose
Pulley End Bearing Type	Ball
Pulley Face Code	Standard
Pulley Shaft Indicator	Standard
Rodent Screen	None
RoHS Status	ROHS NON-COMPLIANT
Service Factor	1.00
Shaft Diameter	0.875 IN
Shaft Extension Location	Pulley End
Shaft Ground Indicator	No Shaft Grounding
Shaft Rotation	Reversible

Shaft Slinger Indicator	No Slinger
Speed	1460 rpm
	1760 rpm
Speed Code	Single Speed
Starting Method	Direct on line
Thermal Device - Bearing	None
Thermal Device - Winding	Normally Closed Thermostat
Vibration Sensor Indicator	No Vibration Sensor
Winding Thermal 1	None
Winding Thermal 2	None

Nameplate

NP0978XPSL									
NO.						**CC**	010A		
SER.						**TEMP CODE**	T4		
SPEC.	05E347X122G1								
CAT.NO.									
HP	1//.75								
VOLTS	230/460//190/380								
AMPS	3/1.5//3/1.4								
RPM	1760//1460				**MOTOR WEIGHT**		78		
HERTZ	60//50	**PH**	3	**CL**	B	**DE BRG**	6205		
SER.F.	1.00	**DES**	B	**CODE**	L	**ODE BRG**	6203		
FRAME	143T			**GREASE**	POLYREX EM				
RATING	40C AMB-CONT								
NEMA-NOM-EFF	85.5	**PF**	71						

AC Induction Motor Performance Data
Record # 36134
Typical performance - not guaranteed values

Winding: 05WGX122-R002	**Type:** 0518M	**Enclosure:** XPFC

Nameplate Data			
Rated Output (HP)			1//.75
Volts			230/460//190/380
Full Load Amps			3/1.5//3/1.4
R.P.M.			1760//1460
Hz	60//50	**Phase**	3
NEMA Design Code	B	**KVA Code**	L
Service Factor (S.F.)			1
NEMA Nom. Eff.	85.5	**Power Factor**	71
Rating - Duty			40C AMB-CONT

460 V, 60 Hz: High Voltage Connection	
Full Load Torque	2.98 LB-FT
Start Configuration	direct on line
Breakdown Torque	12.7 LB-FT
Pull-up Torque	7.92 LB-FT
Locked-rotor Torque	8.7 LB-FT
Starting Current	12.2 A
No-load Current	1.02 A
Line-line Res. @ 25ºC	15.4 Ω
Temp. Rise @ Rated Load	29°C
Locked-rotor Power Factor	54.1
Rotor inertia	0.106 LB-FT2

Load Characteristics 460 V, 60 Hz, 1 HP

% of Rated Load	**25**	**50**	**75**	**100**	**125**	**150**
Power Factor	30	48	61	70	76	80
Efficiency	72.2	82.2	85.2	86	85.6	84.7
Speed	1790	1781	1771	1760	1748	1736
Line amperes	1.07	1.19	1.35	1.55	1.8	2.06

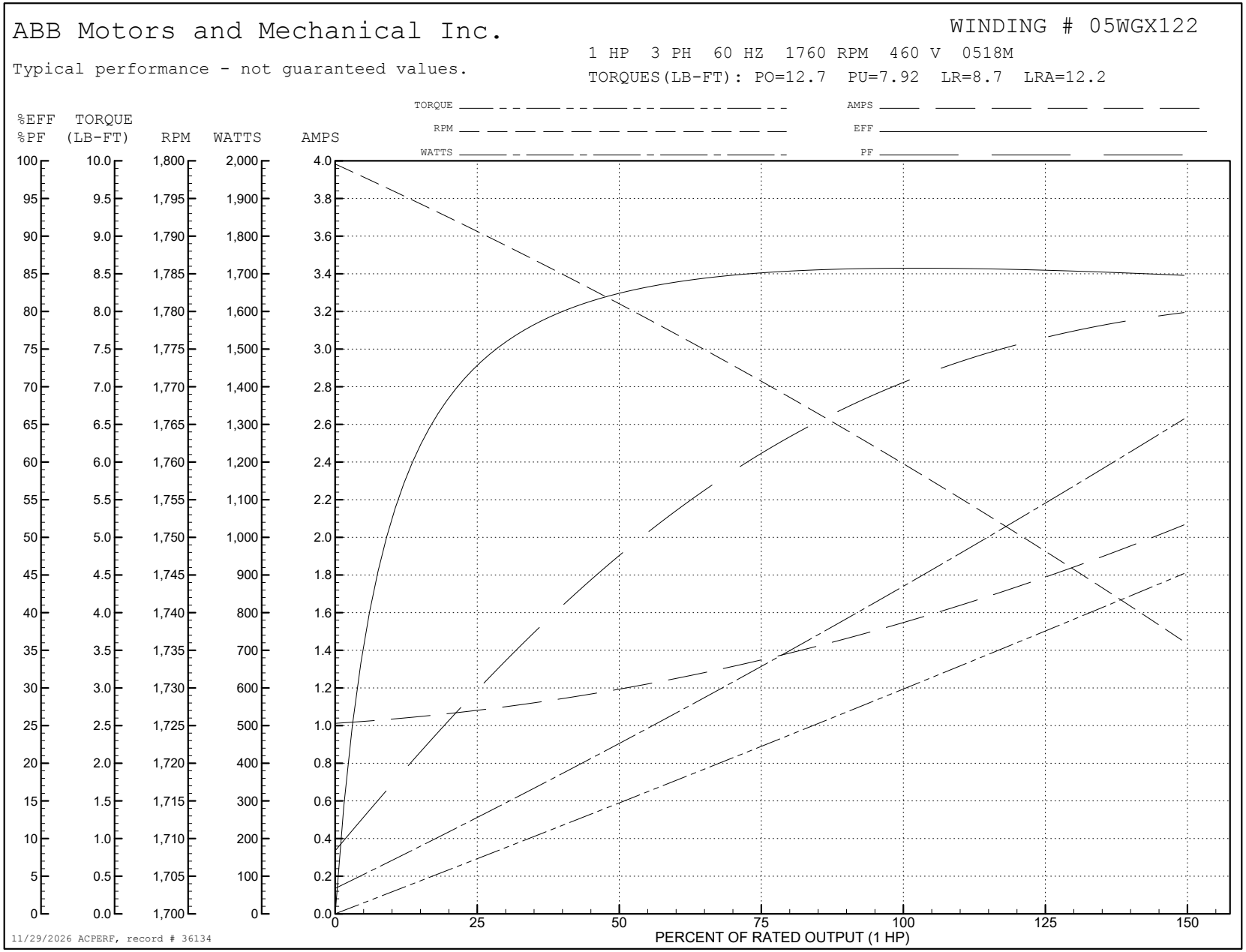
ABB Motors and Mechanical Inc.
WINDING # 05WGX122
Typical performance - not guaranteed values.
1 HP 3 PH 60 HZ 1760 RPM 460 V 0518M
TORQUES(LB-FT): PO=12.7 PU=7.92 LR=8.7 LRA=12.2
TORQUE
RPM
WATTS
AMPS
EFF
PF
%EFF %PF
TORQUE (LB-FT)
RPM
WATTS
AMPS
PERCENT OF RATED OUTPUT (1 HP)
11/29/2026 ACPERF, record # 36134

AC Induction Motor Performance Data
Record # 36135
Typical performance - not guaranteed values

Winding: 05WGX122-R002	**Type:** 0518M	**Enclosure:** XPFC

Nameplate Data			
Rated Output (HP)			1//.75
Volts			230/460//190/380
Full Load Amps			3/1.5//3/1.4
R.P.M.			1760//1460
Hz	60//50	**Phase**	3
NEMA Design Code	B	**KVA Code**	L
Service Factor (S.F.)			1
NEMA Nom. Eff.	85.5	**Power Factor**	71
Rating - Duty			40C AMB-CONT

380 V, 50 Hz: High Voltage Connection	
Full Load Torque	2.69 LB-FT
Start Configuration	direct on line
Breakdown Torque	11.7 LB-FT
Pull-up Torque	7.84 LB-FT
Locked-rotor Torque	8.61 LB-FT
Starting Current	11.4 A
No-load Current	1 A
Line-line Res. @ 25ºC	15.4 Ω
Temp. Rise @ Rated Load	26°C
Locked-rotor Power Factor	59.7
Rotor inertia	0.106 LB-FT2

Load Characteristics 380 V, 50 Hz, 0.75 HP

% of Rated Load	**25**	**50**	**75**	**100**	**125**	**150**
Power Factor	28	47	59	69	75	79
Efficiency	71	80.9	84.2	85.2	84.7	83.7
Speed	1491	1482	1474	1464	1453	1442
Line amperes	1.04	1.14	1.28	1.45	1.67	1.91

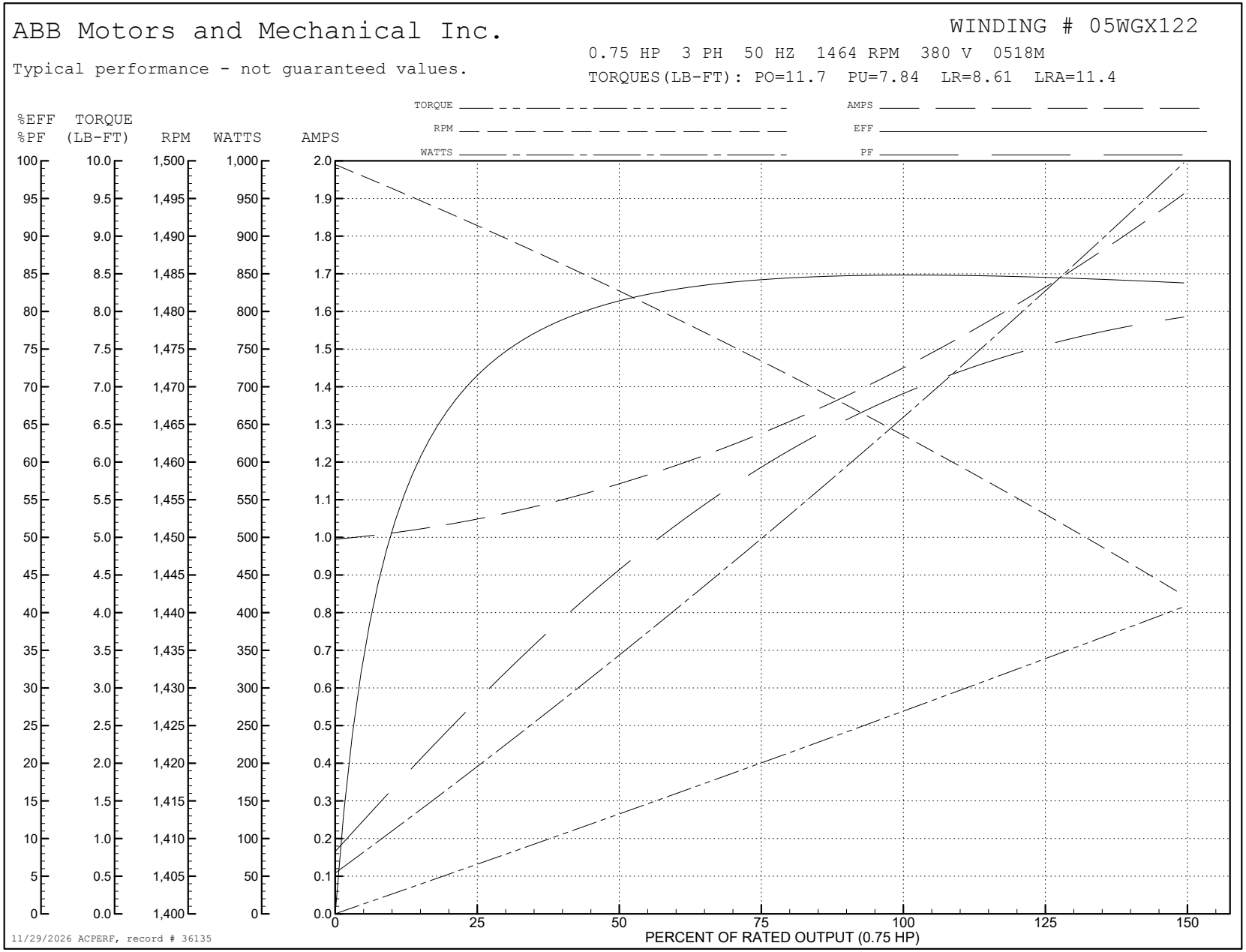
ABB Motors and Mechanical Inc.
WINDING # 05WGX122
0.75 HP 3 PH 50 HZ 1464 RPM 380 V 0518M
Typical performance - not guaranteed values.
TORQUES(LB-FT): PO=11.7 PU=7.84 LR=8.61 LRA=11.4
TORQUE
RPM
WATTS
AMPS
EFF
PF
%EFF %PF
TORQUE (LB-FT)
RPM
WATTS
AMPS
PERCENT OF RATED OUTPUT (0.75 HP)
11/29/2026 ACPERF, record # 36135

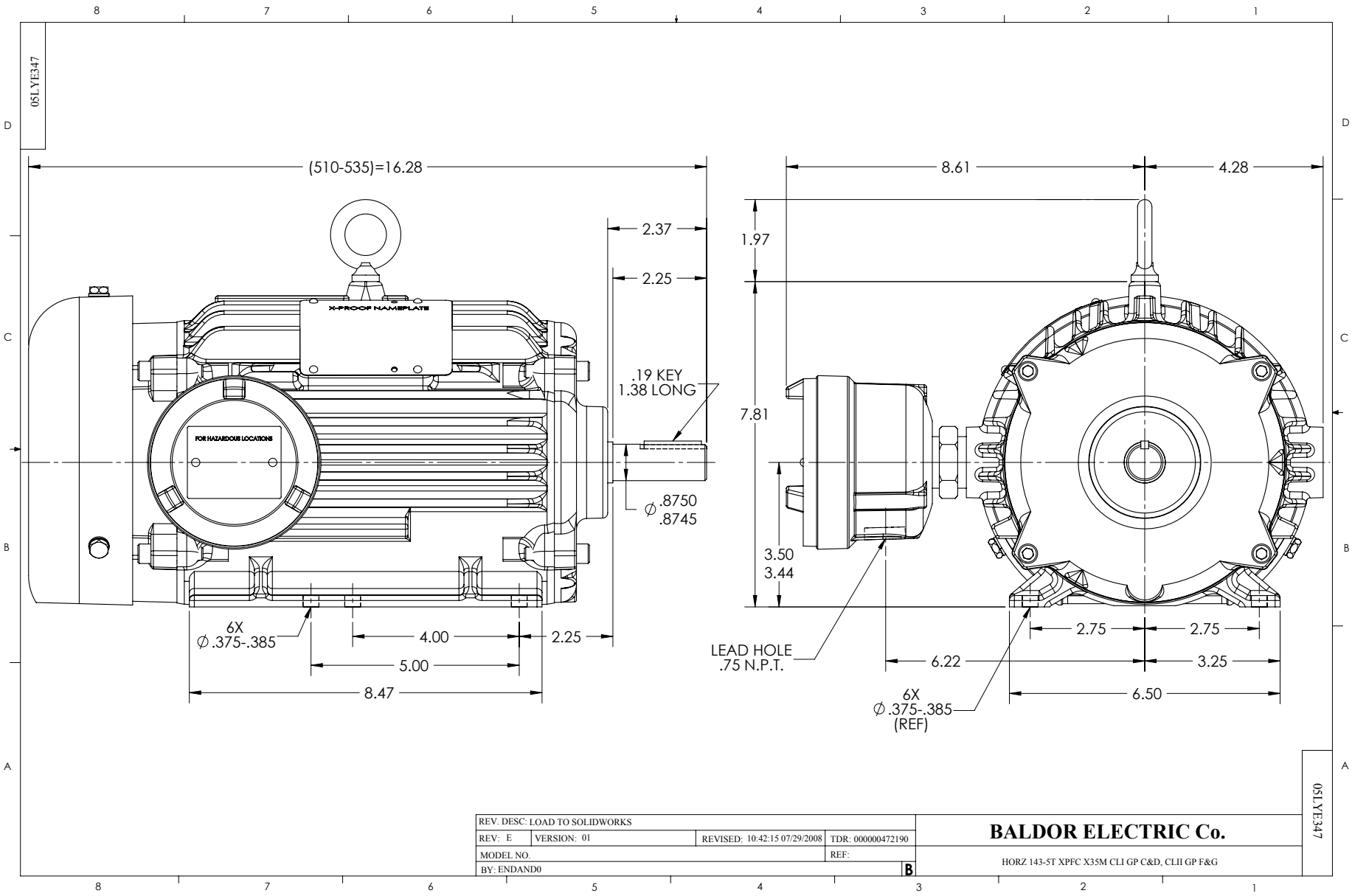
05LYE347
(510-535)=16.28
2.37
2.25
X-PROOF NAMEPLATE
FOR HAZARDOUS LOCATIONS
.19 KEY
1.38 LONG
∅.8750
.8745
6X
∅.375-.385
4.00
2.25
5.00
8.47
8.61
4.28
1.97
7.81
3.50
3.44
LEAD HOLE
.75 N.P.T.
6.22
2.75
2.75
3.25
6.50
6X
∅.375-.385
(REF)
REV. DESC: LOAD TO SOLIDWORKS
REV: E
VERSION: 01
REVISED: 10:42:15 07/29/2008
TDR: 000000472190
MODEL NO.
REF:
BY: ENDAND0
B
BALDOR ELECTRIC Co.
HORZ 143-5T XPFC X35M CLI GP C&D, CLII GP F&G
05LYE347

CD0005

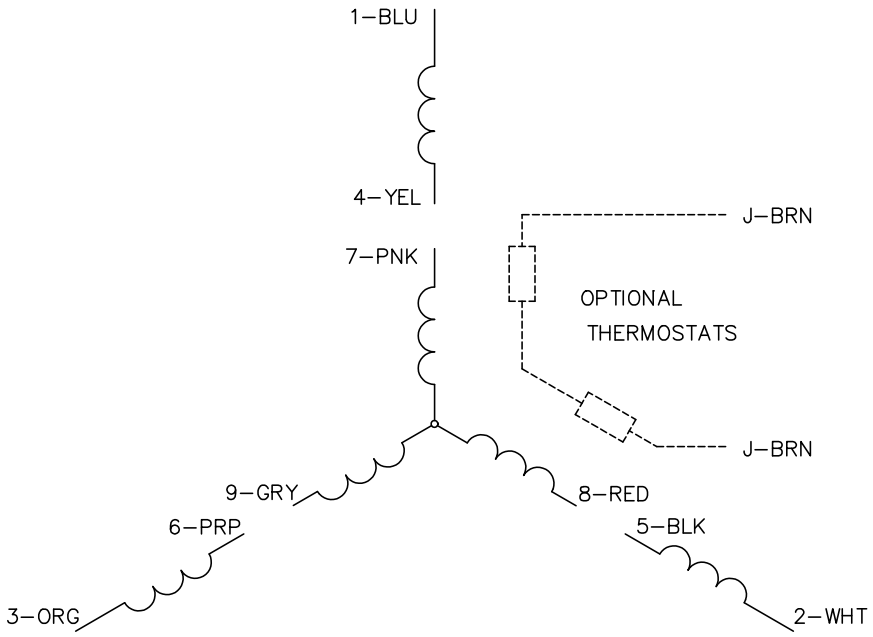

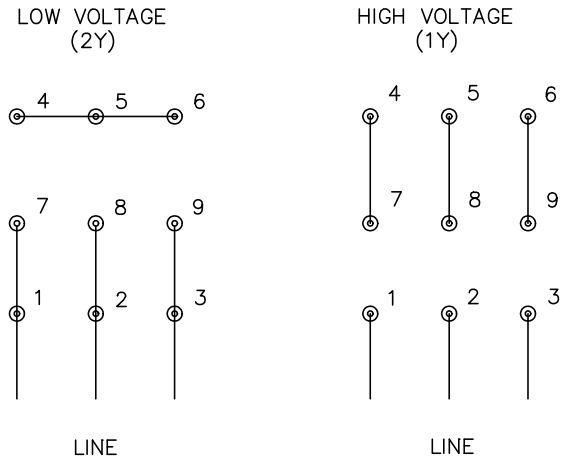

NOTES:

1. INTERCHANGE ANY TWO LINE LEADS TO REVERSE ROTATION.
2. OPTIONAL THERMOSTATS ARE PROVIDED WHEN SPECIFIED.
3. ACTUAL NUMBER OF INTERNAL PARALLEL CIRCUITS MAY BE A MULTIPLE OF THOSE SHOWN ABOVE.
4. LEAD COLORS ARE OPTIONAL. LEADS MUST ALWAYS BE NUMBERED AS SHOWN.

CD0005

REV. DESC: REVISE TO SHOW OPTIONAL COLORS			BALDOR ELECTRIC Co.
REV. LTR: E	BY: JLP	REVISED: 01/19/99 10:15	TDR: 0171435
CD0005		FILE: AAA00005140	MDL: –
		MTL: –	3PH, DV, 9 LEADS