12LYM049

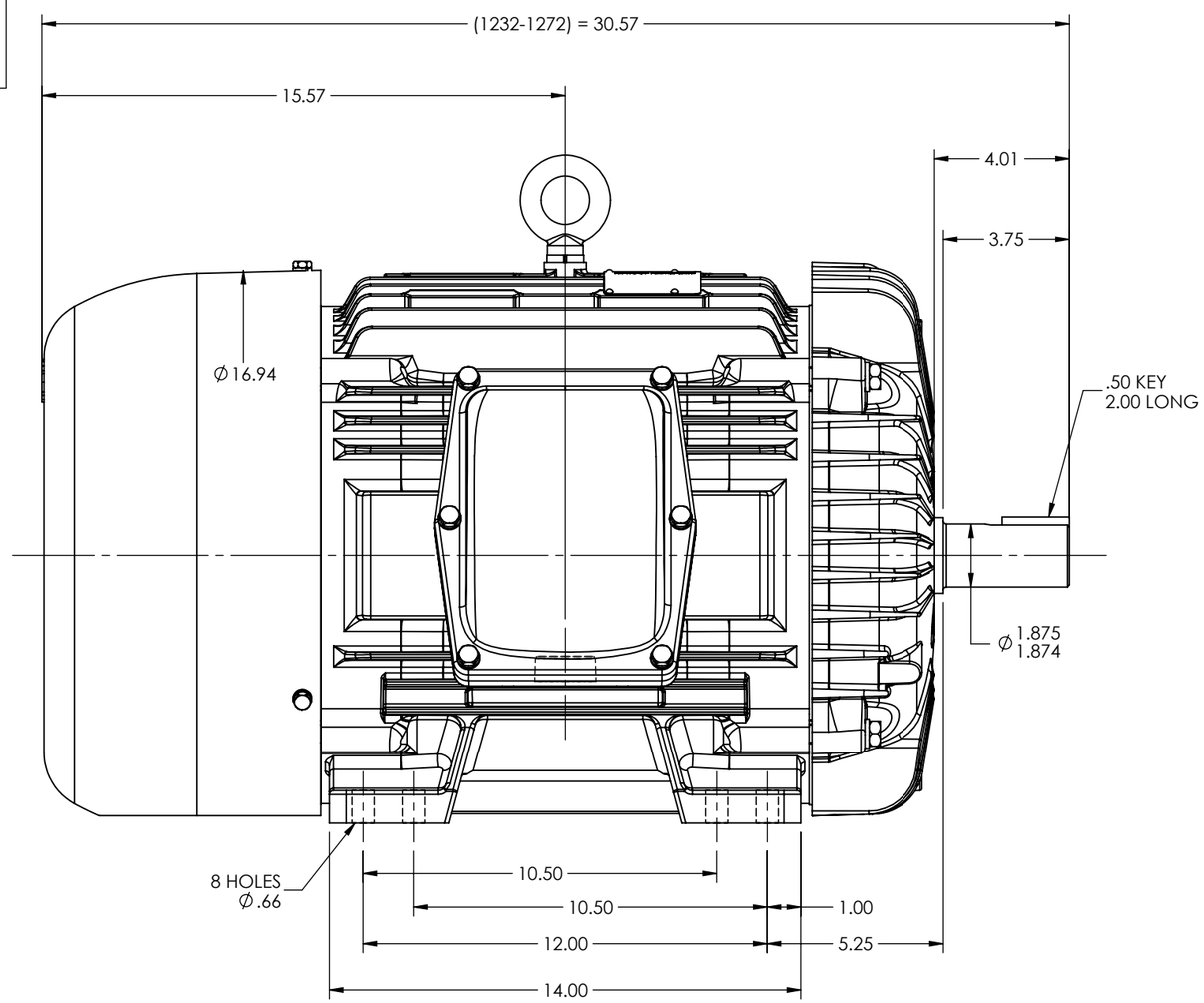

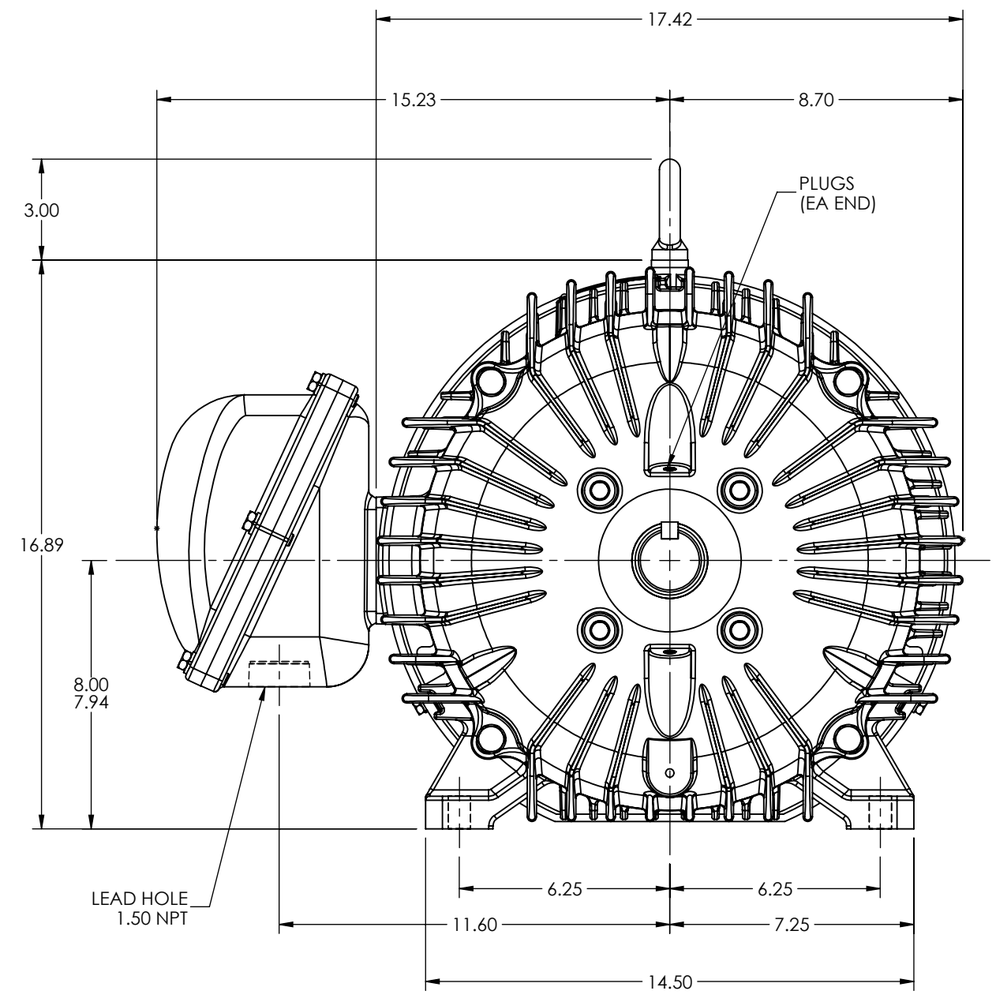

CUSTOMER IS RESPONSIBLE FOR DETERMINING THAT BALDOR'S PRODUCT WILL PERFORM SUITABLY IN THE INTENDED APPLICATION

REV. DESC: CONVERT STOCK LAYOUTS FROM AUTOCAD TO SWD			
REV: C	VERSION: 03	REVISED: 10:10:00 12/14/2023	TDR: 000001220227
MODEL NO. 12LYM049			REF: -
BY: USALMAZ			B

BALDOR

HOR 312M 324-6TS XP. CLI GRP D, CL11 GRP G & F

12LYM049