ABB BALDOR RELIANCE

Customer information packet

EM4412T-4

125HP, 3570RPM, 3PH, 60HZ, 444TS, A4468M, TEFC
Class - None
Division - Not Applicable

Copyright © All product information within this document is subject to ABB Motors and Mechanical Inc. copyright © protection, unless otherwise noted.
11/27/2026 4:15:03 PM

Specifications

Enclosure	TEFC
Frame	444TS
Frame Material	Iron
Frequency	60.00 Hz
Haz Area Class and Group	None
Haz Area Division	Not Applicable
Motor Letter Type	Three Phase
Output @ Frequency	125.000 HP @ 60 HZ
Phase	3
Synchronous Speed @ Frequency	3600 RPM @ 60 HZ
Voltage @ Frequency	460.0 V @ 60 HZ
Agency Approvals	CURUSEEV
	CCSAUSEEV
Ambient Temperature	40 °C
Auxiliary Box	NO AUXILLARY BOX
Base Indicator	Rigid
Bearing Grease Type	Polyrex EM (-20F +300F)
Current @ Voltage	137.000 A @ 460.0 V
Design Code	B
Drip Cover	No Drip Cover
Duty Rating	CONT
Efficiency @ 100% Load	95.0 %
Feedback Device	NO FEEDBACK
Heater Indicator	No Heater
High Voltage Full Load Amps	137.0 a
Insulation Class	F
Inverter Code	Inverter Ready
KVA Code	F
Lifting Lugs	Standard Lifting Lugs
Motor Lead Quantity/Wire Size	6 @ 2 AWG
Motor Standards	NEMA
Motor Type	A4468M

Part Detail

Revision	U
Type	AC
Mech. spec.	
Base	
Status	PRD/A
Elec. spec.	A44WG3534
Layout	617435-049
Eff. date	03-17-2026
CD Diagram	416820-036
Poles	02
Leads	3#2 (02 per group)
Proprietary	False
Created date	08-09-2012

Mounting Arrangement	F1
Number of Poles	2
Overall Length	40.83 IN
Power Factor	89
Product Family	Other
Pulley End Bearing Type	Ball
Pulley Face Code	Standard
Service Factor	1.15
Shaft Diameter	2.375 IN
Shaft Ground Indicator	No Shaft Grounding
Shaft Rotation	Reversible
Speed	3570 rpm
Speed Code	Single Speed
Starting Method	Direct on line
Thermal Device - Bearing	None
Thermal Device - Winding	None

Nameplate

NP2349L												
SPEC NO.	P44G3901		**CAT.NO.**	EM4412T-4						**FRAME**	444TS	
HP	125	**VOLTS**	460	**PHASE**	3	**DESIGN**	B	**TYPE**	P			
RPM	3570	**AMPS**	137	**HZ**	60	**AMB**	40	**SF**	1.15			
DRIVE END BEARING	65BC03J30X		**DUTY**	CONT		**INSUL.CLASS**	F					
OPP D.E. BEARING	65BC03J30X		**ENCL**	TEFC	**CODE**	F						
SER.NO.			**POWER FACTOR**	89				**NEMA-NOM-EFFICIENCY**	95			
						MAX CORR KVAR	18.0	**GUARANTEED EFFICIENCY**	94.1			
								NEMA NOM/CSA QUOTED EFF				
										MOTOR WEIGHT		

Accessories

Part number	Description	Multiplier
089490104B	BRKT,DE 089490103WCA, C-Face	P1
089490108A	D-FLANGE EP MACHINING, G28 W/6313 BRG	P1

REL. S.O.	FRAME	HP	TYPE	PHASE/ HERTZ	RPM	VOLTS
	444TS	125	P	3/60	3570	460

AMPS	DUTY	AMB °C/ INSUL.	S.F.	NEMA DESIGN	CODE LETTER	ENCL.
137	CONT	40/F	1.15	B	F	TEFC

E/S	ROTOR	TEST S.O.	TEST DATE	STATOR RES.@25 °C OHMS (BETWEEN LINES)
-	418143-8-RE	---	---	.0343

PERFORMANCE

LOAD	HP	AMPERES	RPM	% POWER FACTOR	% EFFICIENCY
NO LOAD	0	30.4	3600	7.45	0
1/4	31.3	51.0	3593	62.3	92.1
2/4	62.5	76.5	3585	80.7	94.9
3/4	93.8	106	3578	87.1	95.5
4/4	125	137	3570	89.3	95.4
5/4	156	171	3562	89.9	95.0

SPEED TORQUE

	RPM	TORQUE % FULL LOAD	TORQUE LB.-FT.	AMPERES
LOCKED ROTOR	0	125	229	873
PULL UP	288	102	187	804
BREAKDOWN	3461	277	509	456
FULL LOAD	3570	100	184	137

AMPERES SHOWN FOR 460. VOLT CONNECTION. IF OTHER VOLTAGE CONNECTIONS ARE AVAILABLE, THE AMPERES WILL VARY INVERSELY WITH THE RATED VOLTAGE

REMARKS: TYPICAL DATA

BALDOR A MEMBER OF THE ABB GROUP

DR. BY J. TSAO
CK. BY T. KELATI
APP. BY T.KELATI
DATE 08/10/11

A-C MOTOR PERFORMANCE DATA A44WG3534-R001 ISSUE DATE 04/05/21

REL S.O.	RPM 3570	S.F. 1.15	ROTOR 418143-8-RE
FRAME 444TS	VOLTS 460	NEMA DESIGN B	TEST S.O. TYPICAL DATA
HP 125	AMPS 137	CODE LETTER F	TEST DATE ---
TYPE P	DUTY CONT	ENCLOSURE TEFC	STATOR RES.@ 25 °C .0343
PHASE/HERTZ 3/60	AMB °C/INSUL 40/F	E/S –	OHMS (BETWEEN LINES)

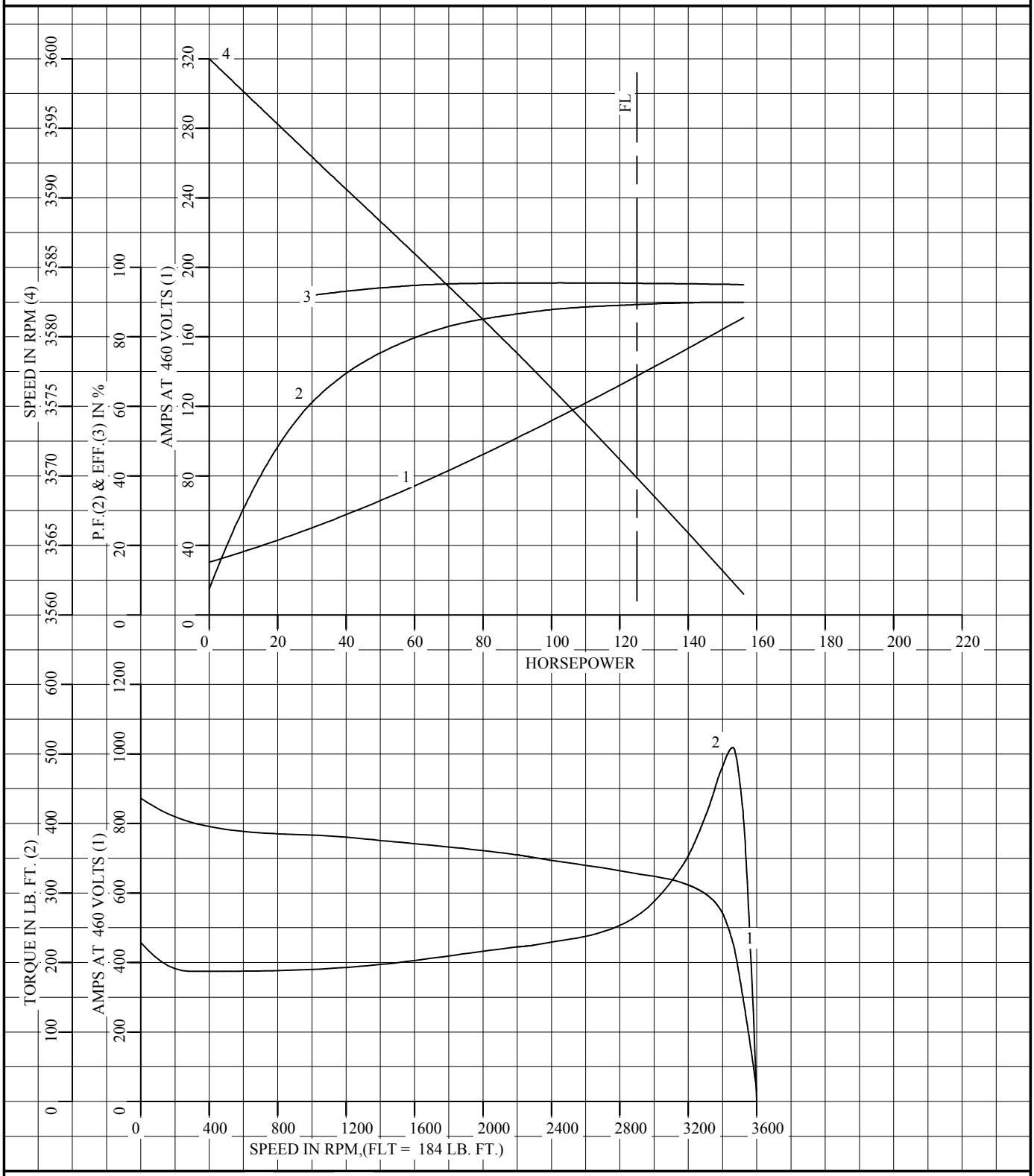

AMPERES SHOWN FOR 460 VOLT CONNECTION, IF OTHER VOLTAGE CONNECTIONS ARE AVAILABLE, THE AMPERES WILL VARY INVERSELY WITH THE RATED VOLTAGE.

BALDOR
A MEMBER OF THE ABB GROUP

DR. BY	J. TSAO
CK. BY	T. KELATI
APP. BY	T.KELATI
DATE	08/10/11

A-C MOTOR PERFORMANCE CURVES

A44WG3534-R001

ISSUE DATE 04/05/21

REL. S.O.	RPM 3570	S.F. 1.15	ROTOR 418143-8-RE
FRAME 444TS	VOLTS 460	NEMA DESIGN B	TEST S.O. TYPICAL DATA
HP 125	AMPS 137	CODE LETTER F	TEST DATE ---
TYPE P	DUTY CONT	ENCLOSURE TEFC	STATOR RES.@ 25 °C.0343
PHASE/HERTZ 3/60	AMB °C/INSUL 40/F	E/S -	OHMS (BETWEEN LINES)

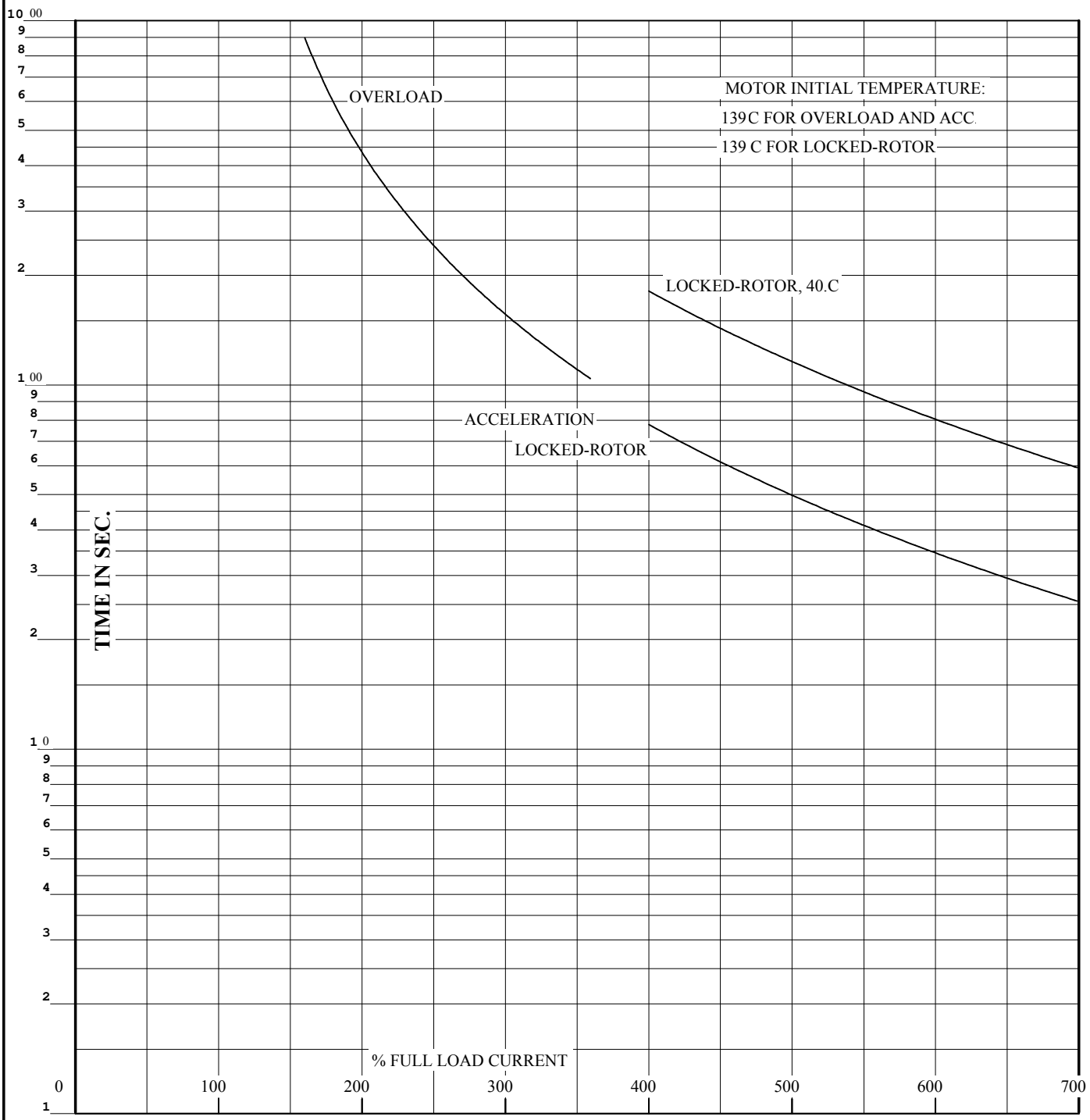

THERMAL LIMIT CURVE

REMARKS:

AMPERES SHOWN FOR 460 VOLT CONNECTION, IF OTHER VOLTAGE CONNECTIONS ARE AVAILABLE, THE AMPERES WILL VARY INVERSELY WITH THE RATED VOLTAGE.

DUTY MASTER ALTERNATING CURRENT MOTORS

617435-049

ENCLOSURE: TOTALLY ENCLOSED

SQUIRREL-CAGE INDUCTION

MOUNTING: FOOT, F-1 SIDE

G445TS/G444TS FRAME MOUNTING HOLES

COOLING: FAN COOLED

STEEL CONDUIT BOX

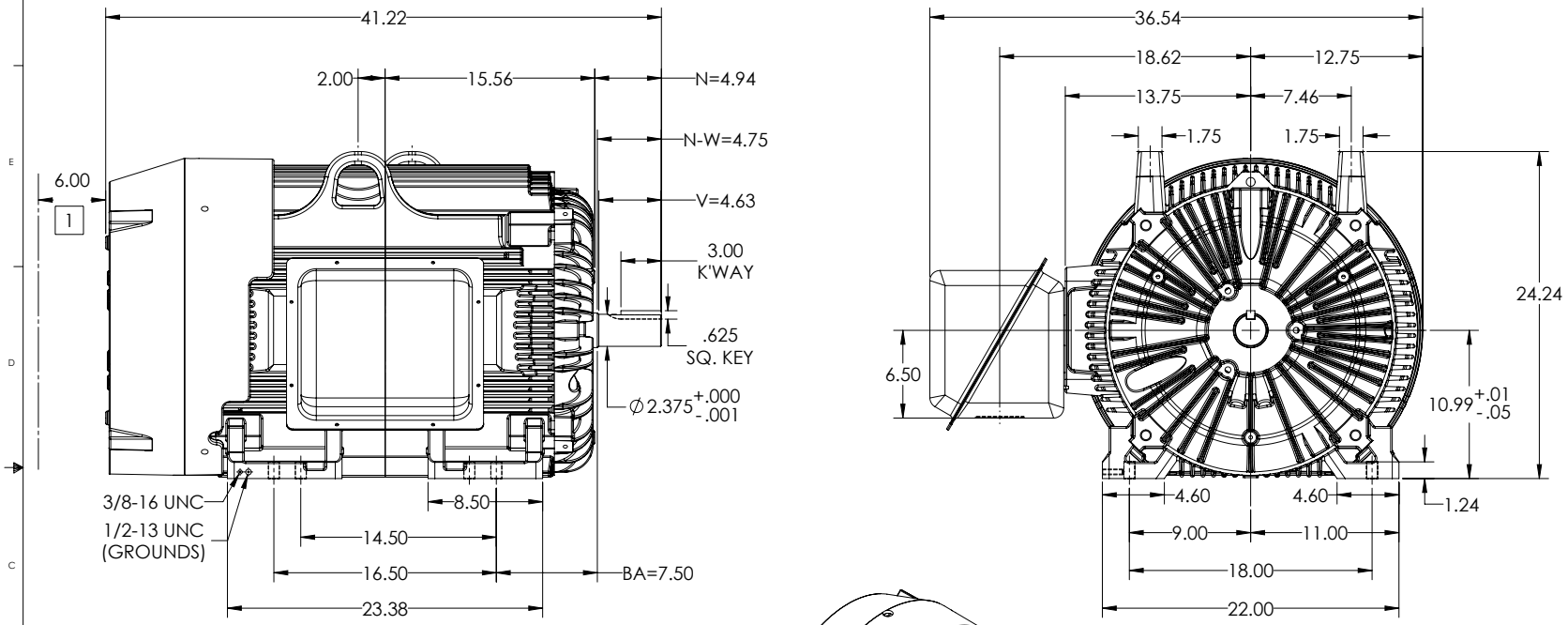

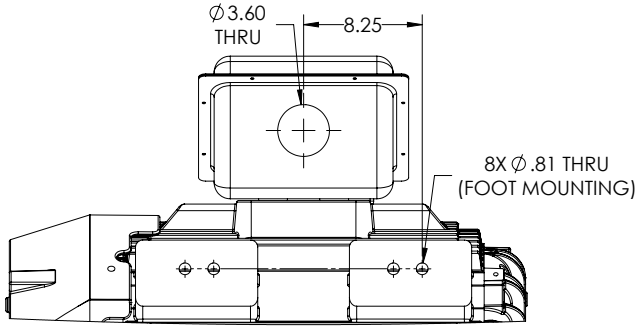

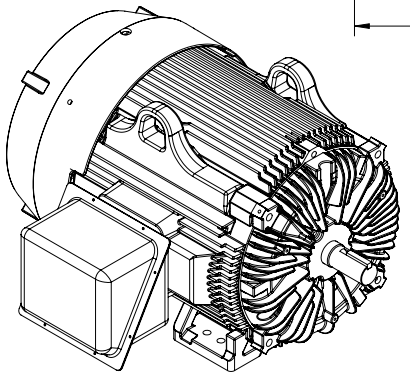

DIMENSIONS ARE IN INCHES
WEIGHT (LBS): 2130, MOTOR WEIGHTS MAY VARY BY 15% DEPENDING ON RATING.
CUSTOMER IS RESPONSIBLE FOR DETERMINING THAT MOTOR PERFORMANCE IS SUITABLE IN THE APPLICATION.

SHEET NUMBER 1 OF 2

617435-049

1 OBSTRUCTION MUST NOT ENCROACH ON AIR INLET

IF MOUNTING CLEARANCE DETAILS ARE REQUIRED, CONSULT FACTORY.
MAX PERMISSIBLE SHAFT RUNOUT WHEN MEASURED AT END OF STANDARD SHAFT EXTENSION IS .003" T.I.R.

REV. DESC: UPDATE DS QUALITY/ADD METRIC DS			
REV: A	VERSION: 01	REVISED: 11:45:13 09/22/2021	TDR: 000001177991
MODEL NO. 617435-049			REF:
BY: USJEDIL	Material:		C

BALDOR

G445/444TS TEFC FOOT F1/STEEL BOX

617435-049

DUTY MASTER ALTERNATING CURRENT MOTORS

617435-049

ENCLOSURE: TOTALLY ENCLOSED

SQUIRREL-CAGE INDUCTION

MOUNTING: FOOT, F-1 SIDE

G445TS/G444TS FRAME MOUNTING HOLES

COOLING: FAN COOLED

STEEL CONDUIT BOX

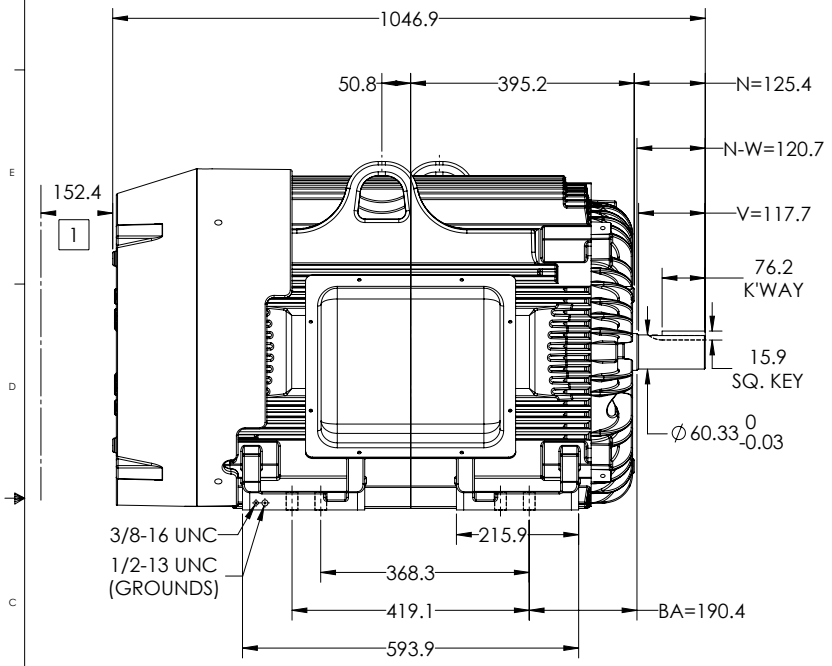

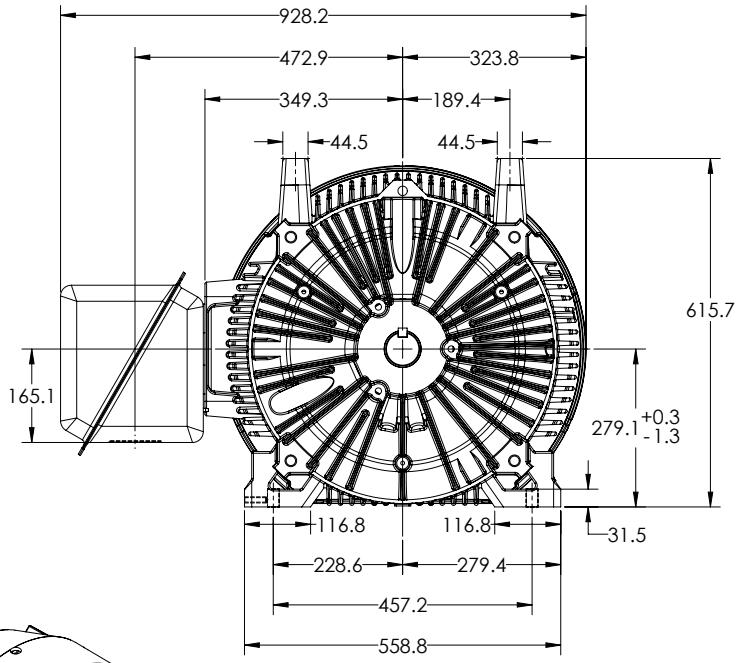

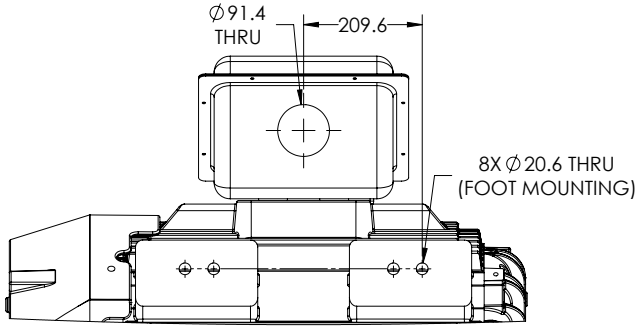

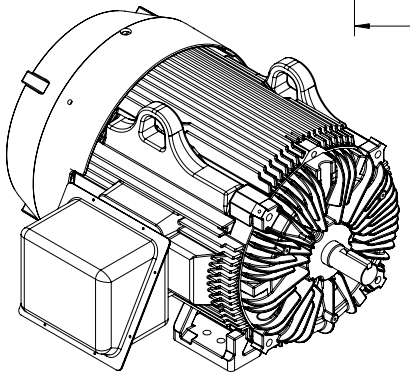

DIMENSIONS ARE IN MILLIMETERS.
WEIGHT (KG): 966, MOTOR WEIGHTS MAY VARY BY 15% DEPENDING ON RATING.
CUSTOMER IS RESPONSIBLE FOR DETERMINING THAT MOTOR PERFORMANCE IS SUITABLE IN THE APPLICATION.

SHEET NUMBER 2 OF 2

617435-049

1 OBSTRUCTION MUST NOT ENCROACH ON AIR INLET

IF MOUNTING CLEARANCE DETAILS ARE REQUIRED, CONSULT FACTORY.
MAX PERMISSIBLE SHAFT RUNOUT WHEN MEASURED AT END OF STANDARD SHAFT EXTENSION IS .08 T.I.R.

REV. DESC: UPDATE DS QUALITY/ADD METRIC DS			
REV: A	VERSION: 01	REVISED: 11:45:13 09/22/2021	TDR: 000001177991
MODEL NO. 617435-049			REF:
BY: USJEDIL	Material:		C

BALDOR

G445/444TS TEFC FOOT F1/STEEL BOX

617435-049

416820–036

A–C MOTOR
CONNECTION DIAGRAM
STANDARD 3 LEAD CONNECTED

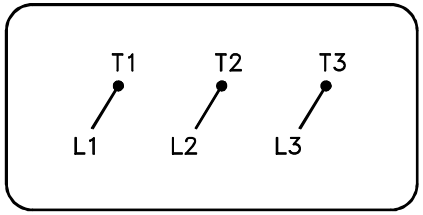

(N.P. 1575–BA)

416820–036

REV. DESC: LOADED TO BUS, C/R 335225			BALDOR
REV. LTR: –	VERSION: 00	TDR: 000000538207	
FILE: \MGA\00000\682		REVISED: 11:54:06 04/30/2010	CONN DIAG – STANDARD 3 LEAD
MTL: –		BY: RAGRA	SH 1 of 1