DUTY MASTER ALTERNATING CURRENT MOTORS

SQUIRREL-CAGE INDUCTION
CAST IRON CONSTRUCTION

617428-025

ENCLOSURE: TOTALLY ENCLOSED
MOUNTING: FOOT

FRAMES 364TS-365TS

COOLING: FAN COOLED

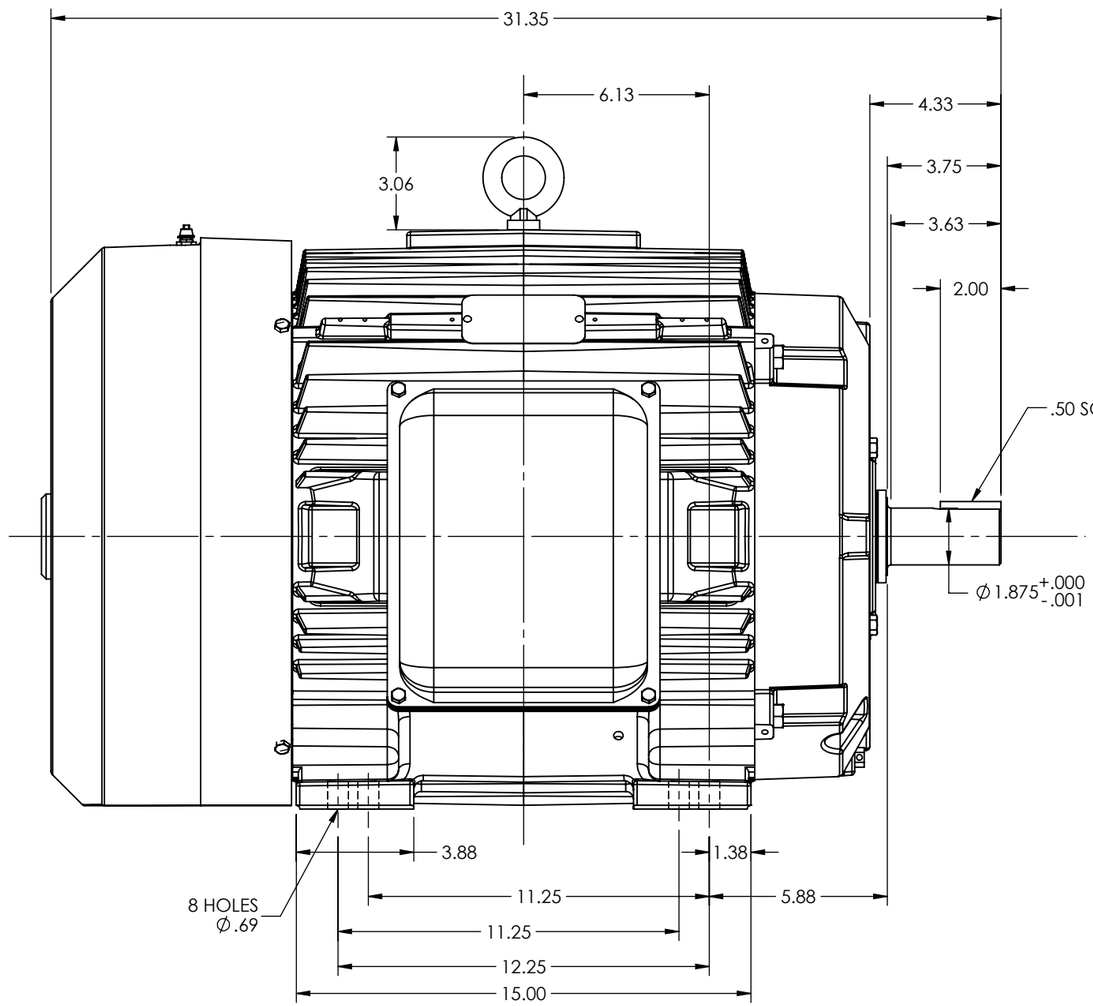

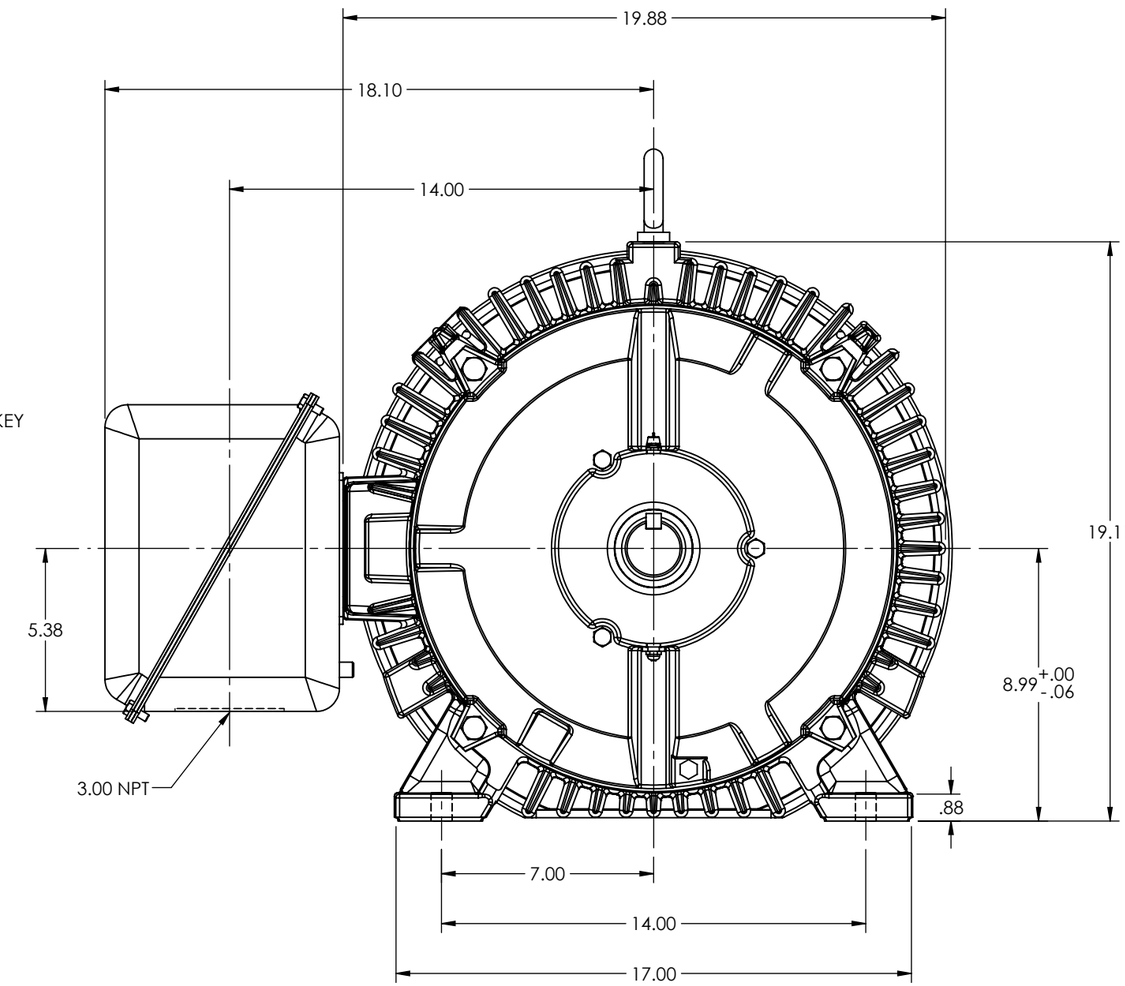

MAXIMUM PERMISSIBLE SHAFT RUNOUT WHEN MEASURED AT END OF STD. SHAFT EXTENSION IS .002 T.I.R. UP TO AND INCLUDING 1.625 DIA. AND .003 T.I.R. 1.625 DIA. TO 5 INCH DIA.

WEIGHT (LBS): 364T = 794
365T = 834

MOTOR WEIGHTS MAY VARY BY 15% DEPENDING UPON RATING.

CUSTOMER IS RESPONSIBLE FOR DETERMINING THAT BALDOR'S PRODUCT WILL PERFORM SUITABLY IN THE INTENDED APPLICATION

REV. DESC: UPDATE MODEL TO ADD EXTERNAL HARDWARE PER PROD MGM			
REV: A	VERSION: 01	REVISED: 03:13:45 10/03/2022	TDR: 000001196512
MODEL NO. 617428-025			REF:
BY: ENFRAJ0			B

BALDOR

DIM SHT TEFC 364-365TS FT MTG W/SHAFT GROUND

617428-025