ABB BALDOR RELIANCE

Customer information packet

EM4308T-G

40HP, 1190RPM, 3PH, 60HZ, 364T, A36062M, TEFC
Class - None
Division - Not Applicable

Copyright © All product information within this document is subject to ABB Motors and Mechanical Inc. copyright © protection, unless otherwise noted.
9/9/2026 1:45:55 PM

Specifications

Enclosure	TEFC
Frame	364T
Frame Material	Iron
Frequency	60.00 Hz
Haz Area Class and Group	None
Haz Area Division	Not Applicable
Motor Letter Type	Three Phase
Output @ Frequency	40.000 HP @ 60 HZ
Phase	3
Synchronous Speed @ Frequency	1200 RPM @ 60 HZ
Voltage @ Frequency	230.0 V @ 60 HZ
	460.0 V @ 60 HZ
Agency Approvals	CCSAUSEEV
	NEMA PREMIUM
	NEMA_PREMIUM
	UR
Ambient Temperature	40 °C
Auxiliary Box	NO AUXILLARY BOX
Base Indicator	Rigid
Bearing Grease Type	Polyrex EM (-20F +300F)
Current @ Voltage	99.600 A @ 230.0 V
	49.800 A @ 460.0 V
	107.000 A @ 208.0 V
Design Code	B
Drip Cover	No Drip Cover
Duty Rating	CONT
Efficiency @ 100% Load	94.1 %
Feedback Device	NO FEEDBACK
Heater Indicator	No Heater
High Voltage Full Load Amps	49.8 a
Insulation Class	H
Inverter Code	Inverter Ready

Part Detail

Revision	L
Type	AC
Mech. spec.	
Base	
Status	PRD/A
Elec. spec.	A36WG1194
Layout	617428-021
Eff. date	07-08-2024
CD Diagram	416820-002
Poles	06
Leads	3#4,6#6
Proprietary	False
Created date	02-25-2020

IP Rating	NONE
KVA Code	G
Lifting Lugs	Standard Lifting Lugs
Max Speed	1800 rpm
Motor Lead Quantity/Wire Size	3 @ 4 AWG
Motor Standards	NEMA
Motor Type	A36062M
Mounting Arrangement	F1
Number of Poles	6
Overall Length	33.48 IN
Power Factor	80
Product Family	General Industrial
Pulley End Bearing Type	Ball
Pulley Face Code	Standard
Service Factor	1.15
Shaft Diameter	2.375 IN
Shaft Ground Indicator	Shaft Grounding
Shaft Rotation	Reversible
Shaft Slinger Indicator	No Slinger
Speed	1190 rpm
Speed Code	Single Speed
Starting Method	Direct on line
Thermal Device - Bearing	None
Thermal Device - Winding	None

Nameplate

NP3979LUA

CAT #	EM4308T-G	**SER**		**CC**	010A								
SPEC	A36-0002-1194	**RATING**	40C AMB-CONT										
HZ	**VOLTS**	**AMPS**	**RPM**	**HP**	**CODE**	**SF**	**DES**	**PF**		**NEMA NOM. EFF**			
60	230/460	99.6/49.8	1190	40	G	1.15	B	80	%	94.1	%		
	-								%		%		
PH	3	**CL**	H	**MAX CORR KVAR**	12								
BRG	**DE**	6313	**ODE**	6313	**ENCL**	TEFC	**FR**	364T		54			
GREASE	POLYREX EM					**MTR WT**	883	**LBS**					
USABLE AT	50HZ 30HP 190/380V 98/49A					SF1.0							
INVERTER DUTY	**CT**	15-60	**HZ**	4:1	**VT**	3-60	**HZ**	20:1	**CHP**	60-90	**HZ**	1.5:1	**1.0 SF VPWM**
MAX RPM	1800	SFA 113/56.3											

AC induction motor performance data

Record #93159 - Typical performance - not guaranteed values

Winding	A36WG1194
Type	A3662M
Enclosure	TEFC

Nameplate data			
Rated Output			40
Volts			230/460
Full Load Amps			99.6/49.8
R.P.M.			1190
Hz	60	Phase	3
KVA Code			G
S.F.			1.15
NEMA Nom. Eff.	94.1	Power Factor	80
Duty			CONT
S.F. Amps			

460 V, 60 Hz:
High Voltage Connection

Full Load Torque	176.8 LB-FT
Start Configuration	direct on line
Breakdown Torque	514 LB-FT
Pull-up Torque	266 LB-FT
Locked-rotor Torque	335 LB-FT
Starting Current	312 A
No-load Current	18.7
Line-line Res. @ 25°C	0.14922 Ω
Temp. Rise @ Rated Load	43°C
Temp. Rise @ S.F. Load	51°C
Locked-rotor Power Factor	25.4
Rotor inertia	0

Load Characteristics 460 V, 60 Hz, 40 HP

% of Rated Load	NL	25	50	75	100	125	150	SF
Power Factor	5	46	67	77	80	82	82	81
Efficiency	0	90	93.5	94.2	94.1	93.7	93	93.9
Speed	1199	1195.3	1193	1190.2	1187.5	1184.3	1181.4	1186
Line amperes	18.7	22.4	29.7	38.9	49.3	60.9	73.7	56.3

ABB BALDOR RELIANCE III

REVIEW

CUSTOMER INFORMATION PACKET EM4308T-G - 40HP, 1190RPM, 3PH, 60HZ, 364T, A36062M, TEFC

WINDING # A36WG1194

40 HP 3 PH 60 HZ 1190 RPM 460 V A3662M

TORQUES(LB-FT): PO=514.00 PU=266.00 LR=335.00 LRA=312.00

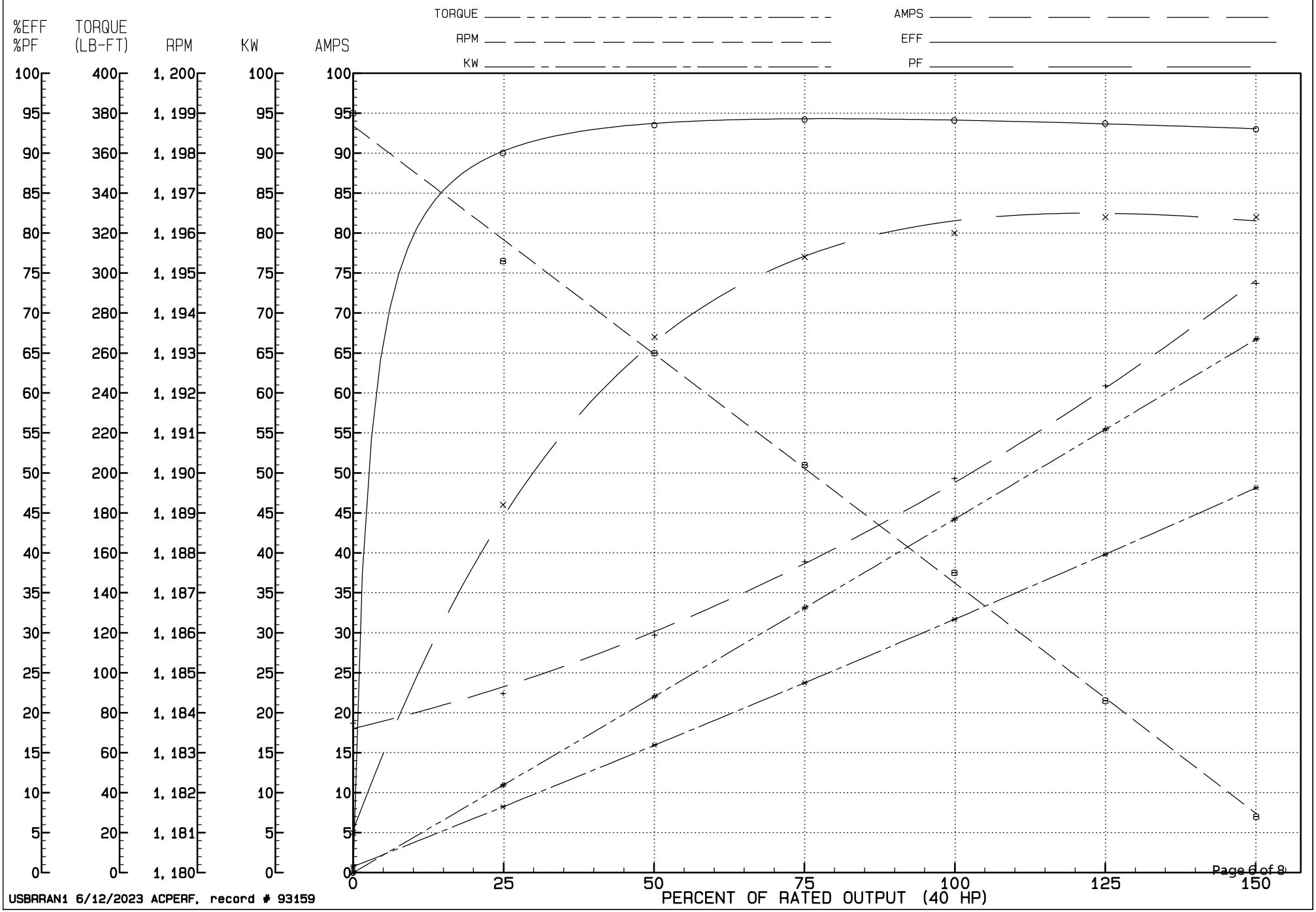

USBRRAN1 6/12/2023 ACPERF, record # 93159

DUTY MASTER ALTERNATING CURRENT MOTORS

SQUIRREL-CAGE INDUCTION
CAST IRON CONSTRUCTION

617428-021

ENCLOSURE: TOTALLY ENCLOSED
MOUNTING: FOOT

FRAMES 364T-365T

COOLING: FAN COOLED

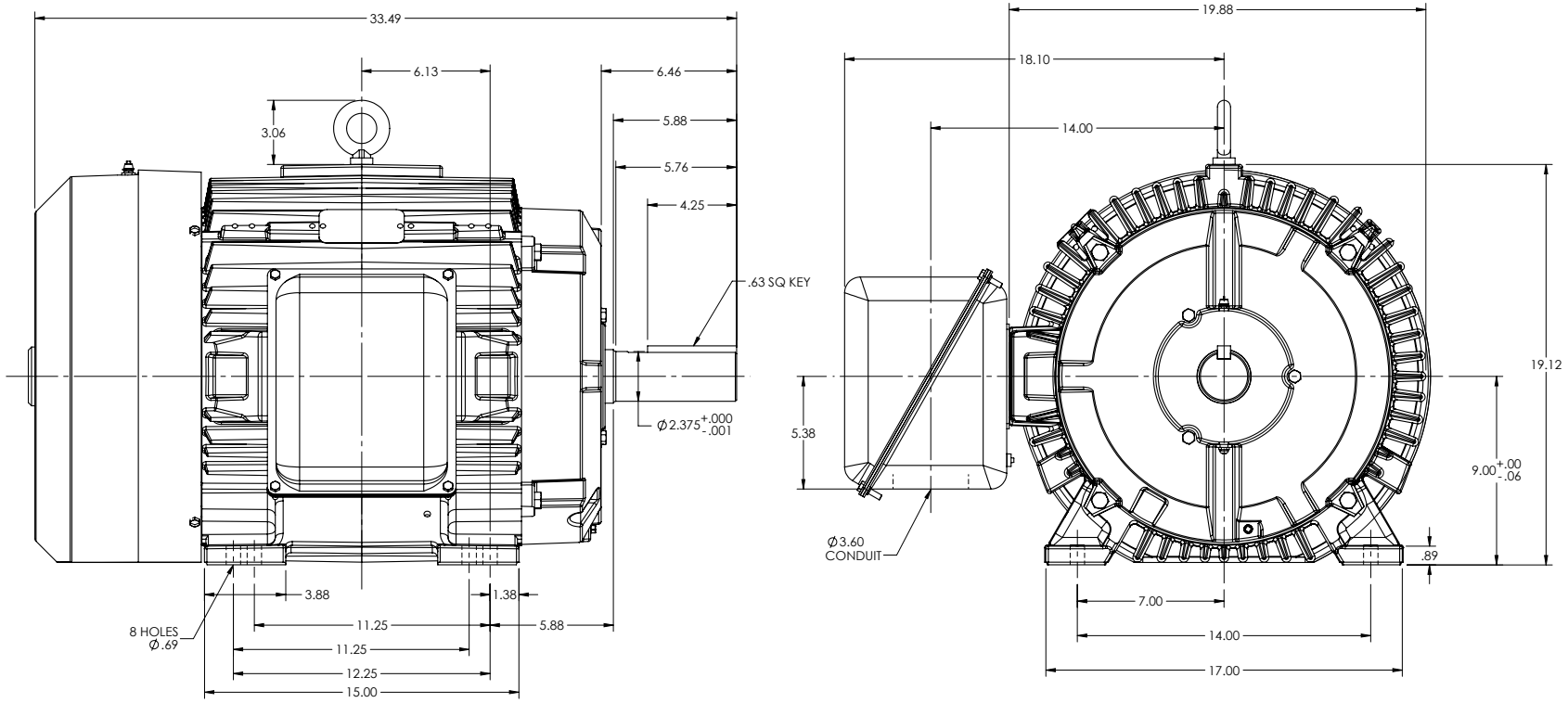

MAXIMUM PERMISSIBLE SHAFT RUNOUT WHEN MEASURED AT END OF STD. SHAFT EXTENSION IS .002 T.I.R. UP TO AND INCLUDING 1.625 DIA. AND .003 T.I.R. 1.625 DIA. TO 5 INCH DIA.

WEIGHT (LBS): 364T = 800
365T = 840

MOTOR WEIGHTS MAY VARY BY 15% DEPENDING UPON RATING.

CUSTOMER IS RESPONSIBLE FOR DETERMINING THAT BALDOR'S PRODUCT WILL PERFORM SUITABLY IN THE INTENDED APPLICATION

REV. DESC: CHG C/BOX ENTRY FROM NPT TO CONDUIT HOLE			
REV: B	VERSION: 02	REVISED: 01:51:11 06/03/2025	TDR: 000001257372
MODEL NO. 617428-021			REF:
BY: RAGGDM			B

BALDOR

DIM SHT TEFC 364-365T FT MTG W/SHAFT GROUND

617428-021

416820–002

A–C MOTOR
CONNECTION DIAGRAM
STANDARD 9 LEAD DELTA–CONNECTED

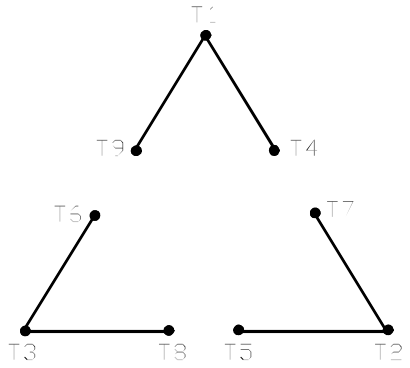

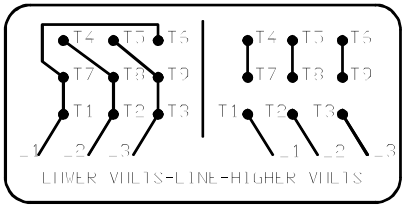

(N. P. 1575-B)

416820–002

REV. DESC: FONT CHANGE FOR PDF SEARCHABLE		
REV. LTR: A	VERSION: 01	TDR: 000001009382
FILE: \MGA\00000\661	REVISED: 02:46:19 02/13/2020	BY: MGHMTT
MTL: –		

BALDOR - RELIANCE®

CONN DIAG – STANDARD 9 LEAD, DELTA–CONNECTED

SH 1 of 1