Customer information packet

EM4117T

30HP, 1180RPM, 3PH, 60HZ, 326T, 1264M, TEFC, F1
Class - None
Division - Not Applicable

Copyright © All product information within this document is subject to ABB Motors and Mechanical Inc. copyright © protection, unless otherwise noted.
11/27/2026 1:12:25 AM

Specifications

Enclosure	TEFC
Frame	326T
Frame Material	Iron
Frequency	60.00 Hz
Haz Area Class and Group	None
Haz Area Division	Not Applicable
Motor Letter Type	Three Phase
Output @ Frequency	30.000 HP @ 60 HZ
Phase	3
Synchronous Speed @ Frequency	1200 RPM @ 60 HZ
Voltage @ Frequency	230.0 V @ 60 HZ
	460.0 V @ 60 HZ
Agency Approvals	NEMA PREMIUM (OLD LOGO)
	CURUSEEV
	NEMA PREMIUM
Ambient Temperature	40 °C
Auxiliary Box	NO AUXILLARY BOX
Auxiliary Box Lead Termination	None
Base Indicator	Rigid
Bearing Grease Type	Polyrex EM (-20F +300F)
Blower	None
Current @ Voltage	82.000 A @ 208.0 V
	78.000 A @ 230.0 V
	39.000 A @ 460.0 V
Design Code	A
Drip Cover	No Drip Cover
Duty Rating	CONT
Efficiency @ 100% Load	93.0 %
Electrically Isolated Bearing	Not Electrically Isolated
Feedback Device	NO FEEDBACK
Front Face Code	Standard
Front Shaft Indicator	None

Part Detail

Revision	T
Type	AC
Mech. spec.	12C51
Base	
Status	PRD/A
Elec. spec.	12WGY812
Layout	12LYC051
Eff. date	09-04-2026
CD Diagram	CD0005
Poles	06
Leads	9#8
Proprietary	False
Created date	07-25-2014

Heater Indicator	No Heater
High Voltage Full Load Amps	39.0 a
Insulation Class	F
Inverter Code	Inverter Duty
IP Rating	NONE
KVA Code	H
Lifting Lugs	Standard Lifting Lugs
Locked Bearing Indicator	Locked Bearing
Motor Lead Exit	Ko Box
Motor Lead Quantity/Wire Size	9 @ 8 AWG
Motor Lead Termination	Flying Leads
Motor Standards	NEMA
Motor Type	1264M
Mounting Arrangement	F1
Number of Poles	6
Overall Length	30.28 IN
Power Factor	78
Product Family	General Purpose
Pulley End Bearing Type	Ball
Pulley Face Code	Standard
Pulley Shaft Indicator	Standard
Rodent Screen	None
RoHS Status	ROHS NON-COMPLIANT
Service Factor	1.15
Shaft Diameter	2.125 IN
Shaft Extension Location	Pulley End
Shaft Ground Indicator	No Shaft Grounding
Shaft Rotation	Reversible
Shaft Slinger Indicator	Shaft Slinger
Speed	1180 rpm
Speed Code	Single Speed
Starting Method	Direct on line
Thermal Device - Bearing	None
Thermal Device - Winding	None

Vibration Sensor Indicator	No Vibration Sensor
Winding Thermal 1	None
Winding Thermal 2	None

Nameplate

NP3443LUA											
CAT.NO.	EM4117T			**CUST. P/N**						**ENCL**	TEFC
SPEC.	12C051Y812G1	**CC**	010A	**FRAME**	326T		**SER.NO.**				
HP	30		**CLASS**	F	**HZ**	60					
R.P.M.	1180		**PH.**	3	**DES.**	A					
VOLTS	230/460			**CODE**	H		**ODE BRG**	6311	**DE BRG**	6312	
AMPS	78/39										
RATING	40C AMB-CONT			**NEMA NOM. EFF.**	93			**GREASE**	POLYREX EM		
P.F.	78	**SER.F.**	1.15	**CT6-60H(10:1)VT3-60H(20:1**							
USABLE AT	50Hz 30HP 190/380V 92/46A			SF1.0							
VOLTS	**AMPS**		**MAX. SPACE HEATER TEMP.**								

Accessories

Part number	Description	Multiplier
12-1105	C FACE KIT	A8
12EP1501A03SP	D-FLANGE KIT	A8

AC Induction Motor Performance Data
Record # 47164
Typical performance - not guaranteed values

Winding: 12WGY812-R001	**Type:** 1264M	**Enclosure:** TEFC

Nameplate Data				**460 V, 60 Hz: High Voltage Connection**	
Rated Output (HP)			30	**Full Load Torque**	133 LB-FT
Volts			230/460	**Start Configuration**	direct on line
Full Load Amps			78/39	**Breakdown Torque**	370 LB-FT
R.P.M.			1180	**Pull-up Torque**	179 LB-FT
Hz	60	**Phase**	3	**Locked-rotor Torque**	217 LB-FT
NEMA Design Code	A	**KVA Code**	H	**Starting Current**	245 A
Service Factor (S.F.)			1.15	**No-load Current**	17.2 A
NEMA Nom. Eff.	93	**Power Factor**	78	**Line-line Res. @ 25ºC**	0.22799 Ω
Rating - Duty			40C AMB-CONT	**Temp. Rise @ Rated Load**	56°C
S.F. Amps				**Temp. Rise @ S.F. Load**	68°C
				Locked-rotor Power Factor	27.2
				Rotor inertia	12.2 lb-ft²

Load Characteristics 460 V, 60 Hz, 30 HP

% of Rated Load	**25**	**50**	**75**	**100**	**125**	**150**	**S.F.**
Power Factor	42	63	73	78	80	80	79
Efficiency	89	92.7	93.4	93.1	92.4	91.4	92.7
Speed	1196.5	1191.9	1188.3	1183.2	1178.2	1171.8	1180
Line amperes	19.2	24.1	31	38.7	47.5	57.3	44

ABB Motors and Mechanical Inc.

WINDING # 12WGY812

30 HP 3 PH 60 HZ 1180 RPM 460 V 1264M

Typical performance - not guaranteed values.

TORQUES(LB-FT): PO=370 PU=179 LR=217 LRA=245

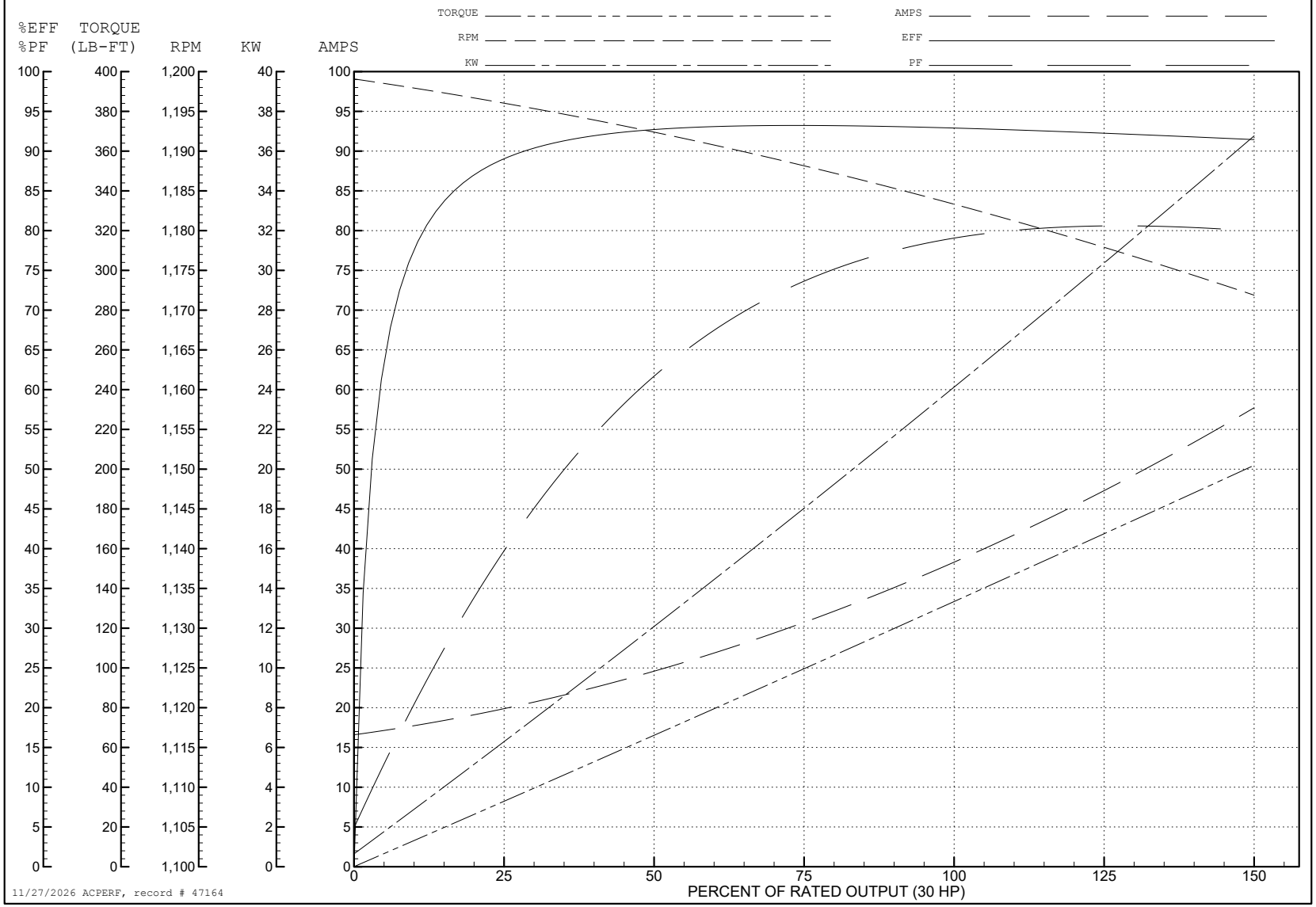

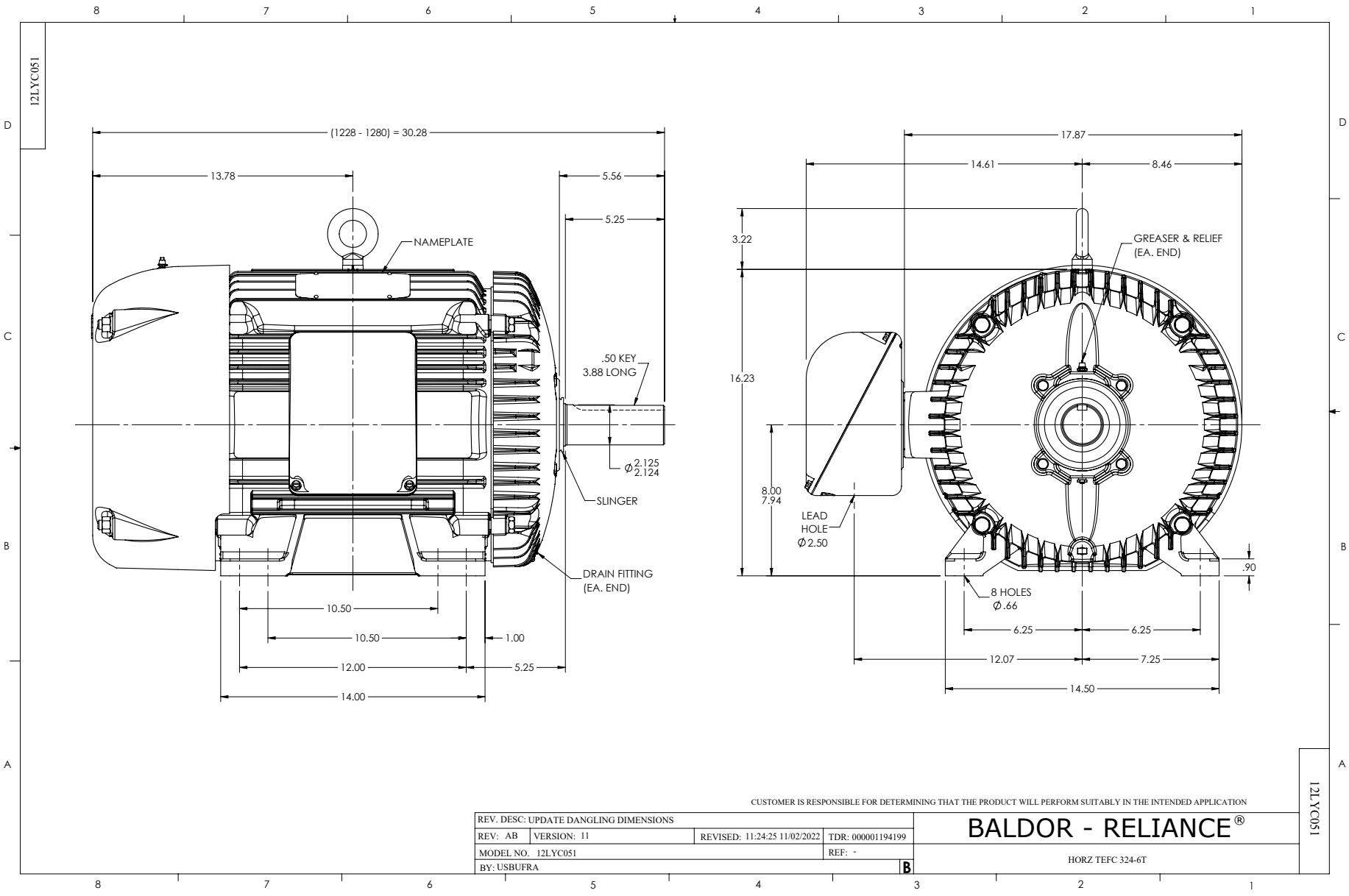
12LYC051
(1228 - 1280) = 30.28
13.78
5.56
5.25
NAMEPLATE
.50 KEY
3.88 LONG
Ø 2.125
2.124
SLINGER
DRAIN FITTING
(EA. END)
10.50
10.50
1.00
12.00
5.25
14.00
17.87
14.61
8.46
3.22
GREASER & RELIEF
(EA. END)
16.23
8.00
7.94
LEAD
HOLE
Ø 2.50
.90
8 HOLES
Ø .66
6.25
6.25
12.07
7.25
14.50
CUSTOMER IS RESPONSIBLE FOR DETERMINING THAT THE PRODUCT WILL PERFORM SUITABLY IN THE INTENDED APPLICATION
REV. DESC: UPDATE DANGLING DIMENSIONS
REV: AB
VERSION: 11
REVISED: 11:24:25 11/02/2022
TDR: 000001194199
MODEL NO. 12LYC051
REF: -
BY: USBUFRA
B
BALDOR - RELIANCE®
HORZ TEFC 324-6T
12LYC051

CD0005

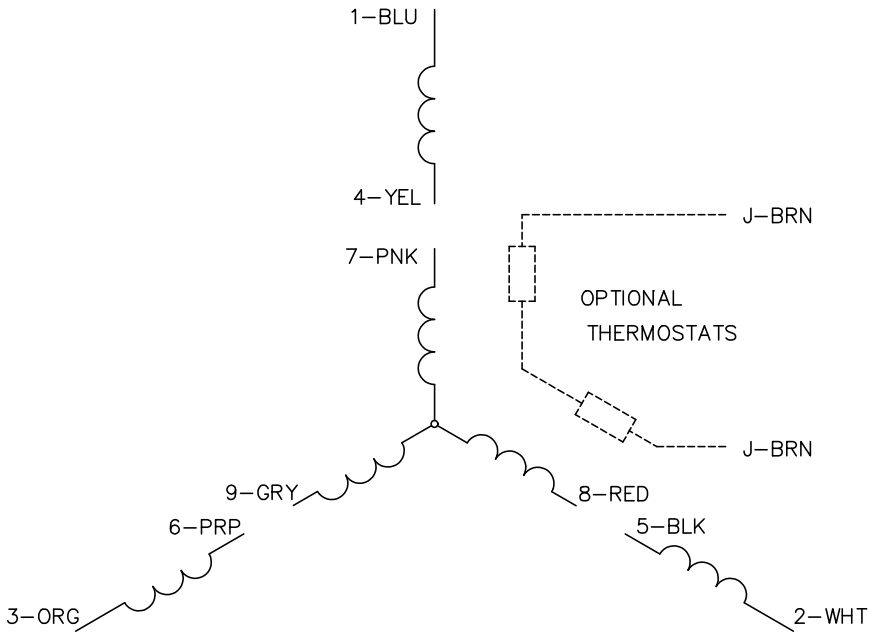

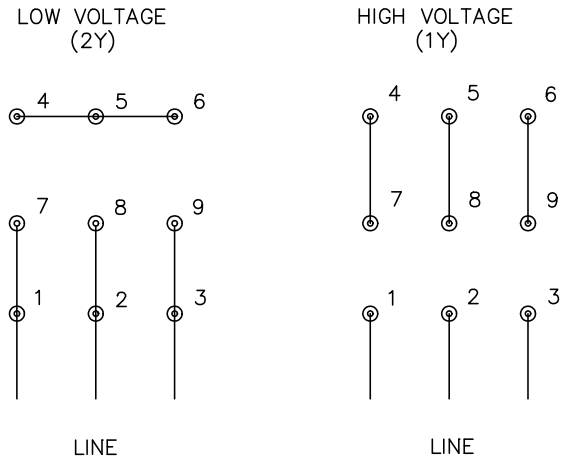

NOTES:

1. INTERCHANGE ANY TWO LINE LEADS TO REVERSE ROTATION.
2. OPTIONAL THERMOSTATS ARE PROVIDED WHEN SPECIFIED.
3. ACTUAL NUMBER OF INTERNAL PARALLEL CIRCUITS MAY BE A MULTIPLE OF THOSE SHOWN ABOVE.
4. LEAD COLORS ARE OPTIONAL. LEADS MUST ALWAYS BE NUMBERED AS SHOWN.

CD0005

REV. DESC: REVISE TO SHOW OPTIONAL COLORS			BALDOR ELECTRIC Co.
REV. LTR: E	BY: JLP	REVISED: 01/19/99 10:15	TDR: 0171435
CD0005		FILE: AAA00005140	MDL: –
		MTL: –	3PH, DV, 9 LEADS