ABB BALDOR RELIANCE

Customer information packet

EM4110T-5BG

40HP, 1775RPM, 3PH, 60HZ, 324T, 1254M, TEFC, F1
Class - None
Division - Not Applicable

Copyright © All product information within this document is subject to ABB Motors and Mechanical Inc. copyright © protection, unless otherwise noted.
11/25/2026 7:15:41 AM

Specifications

Enclosure	TEFC
Frame	324T
Frame Material	Iron
Frequency	60.00 Hz
Haz Area Class and Group	None
Haz Area Division	Not Applicable
Motor Letter Type	Three Phase
Output @ Frequency	40.000 HP @ 60 HZ
Phase	3
Synchronous Speed @ Frequency	1800 RPM @ 60 HZ
Voltage @ Frequency	575.0 V @ 60 HZ
Agency Approvals	UR
	CSA
	CSA EEV
Ambient Temperature	40 °C
Auxiliary Box	NO AUXILLARY BOX
Auxiliary Box Lead Termination	None
Base Indicator	Rigid
Bearing Grease Type	Polyrex EM (-20F +300F)
Blower	None
Current @ Voltage	39.000 A @ 575.0 V
Design Code	A
Drip Cover	No Drip Cover
Duty Rating	CONT
Efficiency @ 100% Load	94.1 %
Electrically Isolated Bearing	Not Electrically Isolated
Feedback Device	NO FEEDBACK
Front Face Code	Standard
Front Shaft Indicator	None
Heater Indicator	No Heater
High Voltage Full Load Amps	39.0 a
Insulation Class	H

Part Detail

Revision	R
Type	AC
Mech. spec.	12G931
Base	
Status	PRD/A
Elec. spec.	12WGY285
Layout	12LYG931
Eff. date	02-12-2024
CD Diagram	CD0006
Poles	04
Leads	3#8
Proprietary	False
Created date	09-19-2014

Inverter Code	Inverter Ready
KVA Code	H
Lifting Lugs	Standard Lifting Lugs
Locked Bearing Indicator	Locked Bearing
Motor Lead Exit	Ko Box
Motor Lead Quantity/Wire Size	3 @ 8 AWG
Motor Lead Termination	Flying Leads
Motor Standards	NEMA
Motor Type	1254M
Mounting Arrangement	F1
Number of Poles	4
Overall Length	30.28 IN
Power Factor	82
Product Family	General Purpose
Pulley End Bearing Type	Ball
Pulley Face Code	Standard
Pulley Shaft Indicator	Standard
Rodent Screen	None
Service Factor	1.15
Shaft Diameter	2.125 IN
Shaft Extension Location	Pulley End
Shaft Ground Indicator	Shaft Grounding
Shaft Rotation	Reversible
Shaft Slinger Indicator	Shaft Slinger
Speed	1775 rpm
Speed Code	Single Speed
Starting Method	Direct on line
Thermal Device - Bearing	NONE (OLD)
Thermal Device - Winding	None
Vibration Sensor Indicator	No Vibration Sensor
Winding Thermal 1	None
Winding Thermal 2	None

Nameplate

NP2138L												
CAT.NO.	EM4110T-5BG		**P/N**				**ENCLOSURE**	TEFC				
SPEC.	12G931Y285G1	**CC**	010A		**FRAME**	324T	**S/N**					
HP	40		**CLASS**	H	**HZ**	60						
RPM	1775		**PH**	3	**DES**	A						
VOLT	575				**KVA-CODE**	H	**ODE BRG**	6311	**DE BRG**	6312		
AMP	39											
RATING	40C AMB-CONT				**GREASE**	POLYREX EM						
NEMA-NOM-EFF	94.1	**PF**	82	**SER.F.**	1.15							
HTR-VOLTS		**HTR-AMPS**										

AC Induction Motor Performance Data
Record # 47382
Typical performance - not guaranteed values

Winding: 12WGY285-R003	**Type:** 1254M	**Enclosure:** TEFC

Nameplate Data				**575 V, 60 Hz: Single Voltage Motor**	
Rated Output (HP)			40	**Full Load Torque**	118 LB-FT
Volts			575	**Start Configuration**	direct on line
Full Load Amps			39	**Breakdown Torque**	367 LB-FT
R.P.M.			1775	**Pull-up Torque**	174 LB-FT
Hz	60	**Phase**	3	**Locked-rotor Torque**	185 LB-FT
NEMA Design Code	A	**KVA Code**	H	**Starting Current**	267 A
Service Factor (S.F.)			1.15	**No-load Current**	15.6 A
NEMA Nom. Eff.	94.1	**Power Factor**	82	**Line-line Res. @ 25ºC**	0.232 Ω
Rating - Duty			40C AMB-CONT	**Temp. Rise @ Rated Load**	54°C
S.F. Amps				**Temp. Rise @ S.F. Load**	65°C
				Locked-rotor Power Factor	28
				Rotor inertia	7.19 LB-FT2

Load Characteristics 575 V, 60 Hz, 40 HP

% of Rated Load	**25**	**50**	**75**	**100**	**125**	**150**	**S.F.**
Power Factor	46	67	77	82	84	85	83
Efficiency	90.1	93.6	94.3	94.3	94.2	93.3	94.2
Speed	1795	1790	1785	1780	1774	1767	1776
Line amperes	18.3	24.1	31.1	38.7	47.6	56.3	44

ABB Motors and Mechanical Inc.

WINDING # 12WGY285

40 HP 3 PH 60 HZ 1775 RPM 575 V 1254M

Typical performance - not guaranteed values.

TORQUES(LB-FT): PO=367 PU=174 LR=185 LRA=267

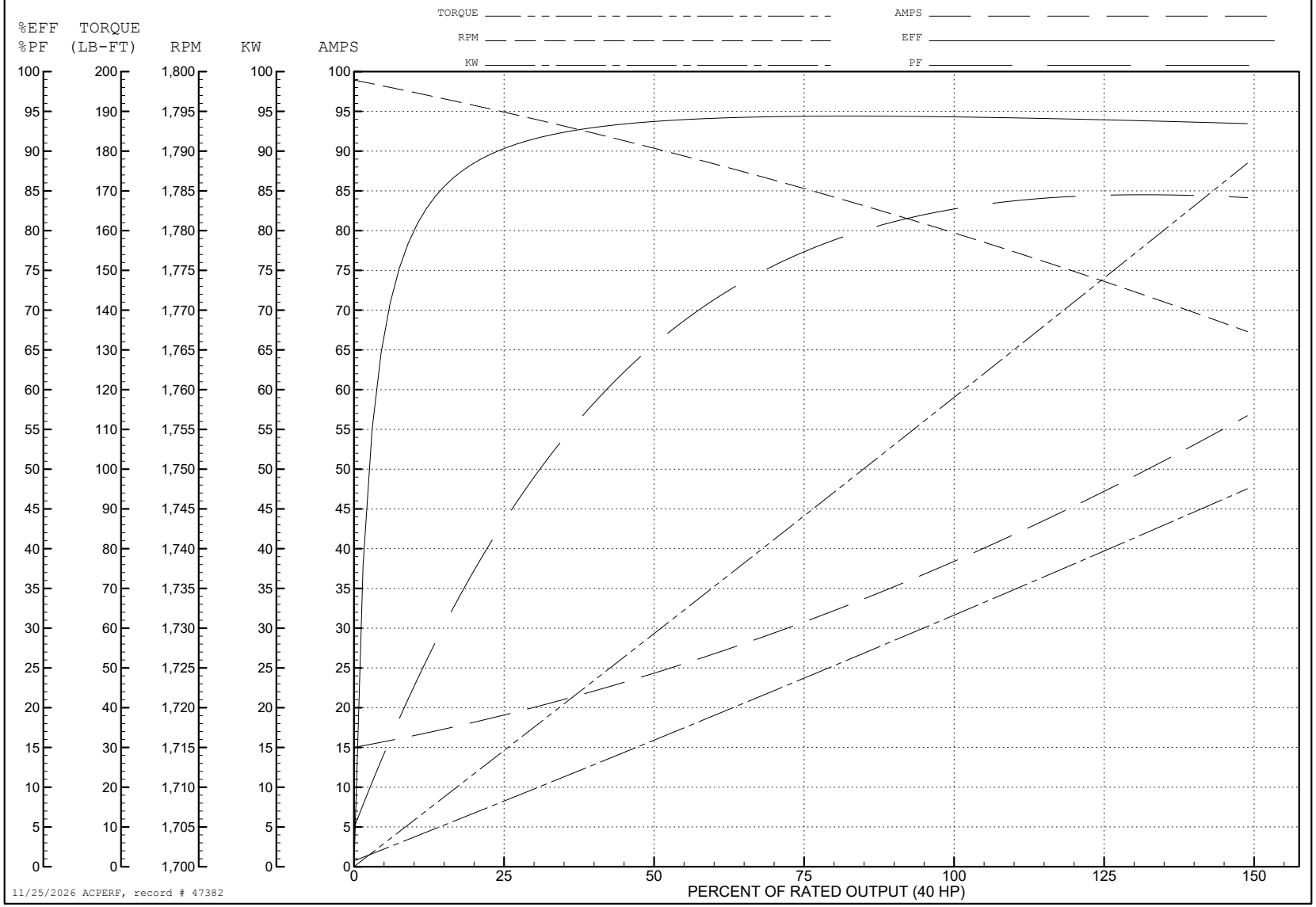

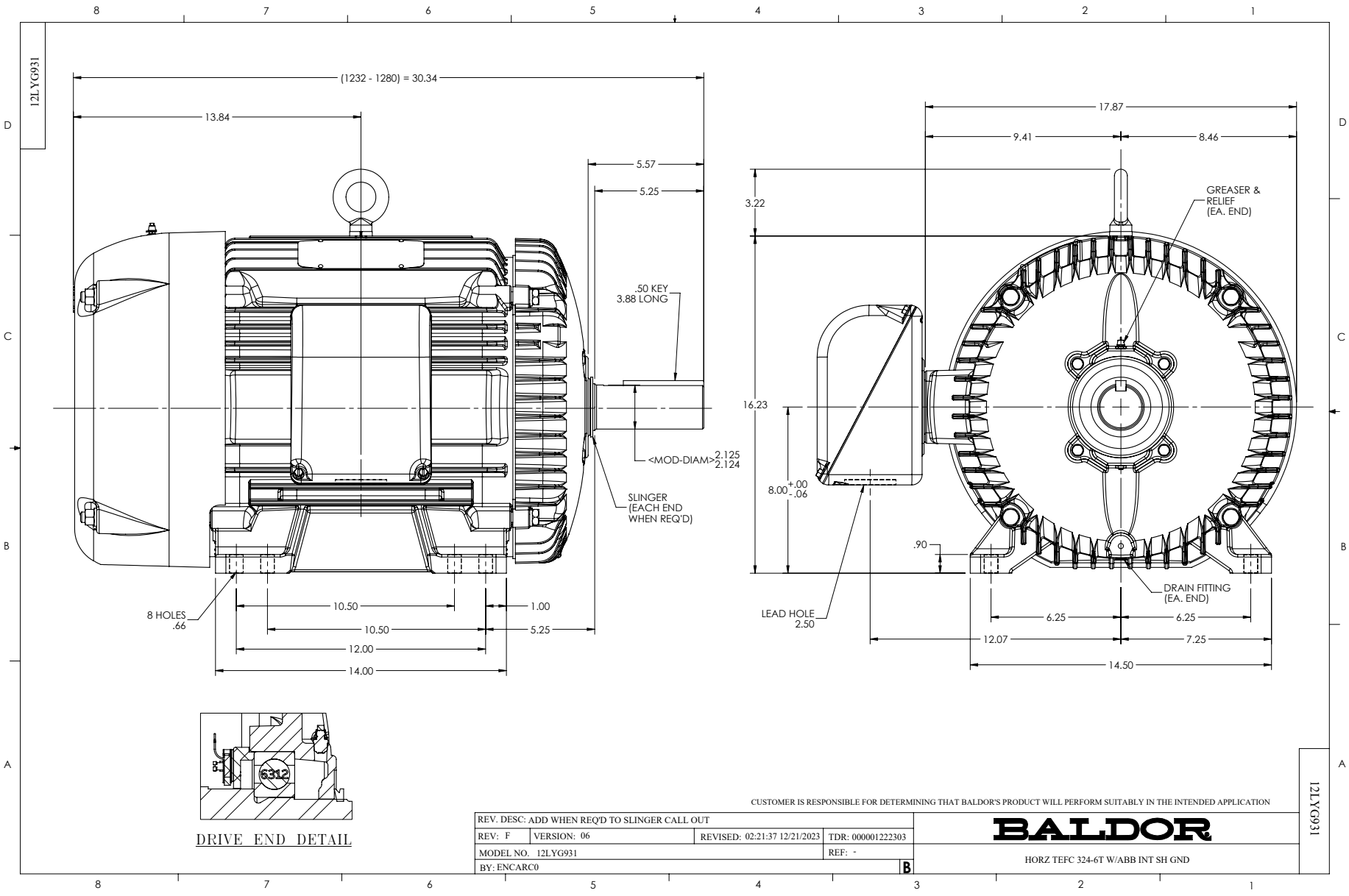
12LYG931
(1232 - 1280) = 30.34
13.84
5.57
5.25
.50 KEY
3.88 LONG
<MOD-DIAM>2.125
2.124
SLINGER
(EACH END
WHEN REQ'D)
8 HOLES
.66
10.50
1.00
10.50
5.25
12.00
14.00
17.87
9.41
8.46
3.22
GREASER &
RELIEF
(EA. END)
16.23
8.00 +.00 -.06
.90
DRAIN FITTING
(EA. END)
LEAD HOLE
2.50
6.25
6.25
12.07
7.25
14.50
6312
DRIVE END DETAIL
CUSTOMER IS RESPONSIBLE FOR DETERMINING THAT BALDOR'S PRODUCT WILL PERFORM SUITABLY IN THE INTENDED APPLICATION
REV. DESC: ADD WHEN REQ'D TO SLINGER CALL OUT
REV: F
VERSION: 06
REVISED: 02:21:37 12/21/2023
TDR: 000001222303
MODEL NO. 12LYG931
REF: -
BY: ENCARC0
B
BALDOR
HORZ TEFC 324-6T W/ABB INT SH GND
12LYG931

CD0006

TYPICAL WYE–CONNECTED MOTOR

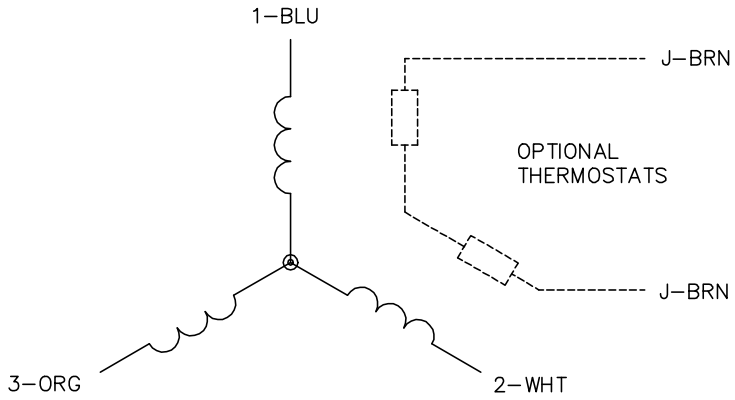

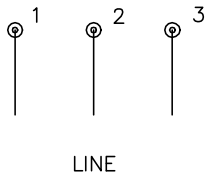

TYPICAL DELTA–CONNECTED MOTOR

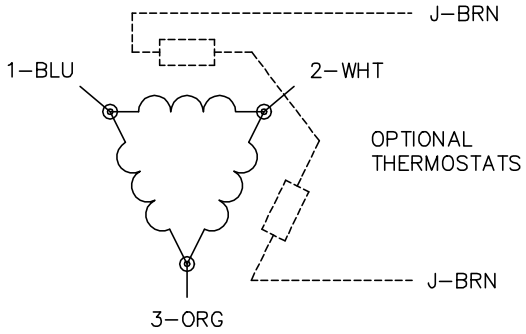

NOTES:

1. THREE LEAD MOTOR MAY BE EITHER WYE CONNECTED OR DELTA CONNECTED.
2. INTERCHANGE ANY TWO LINE LEADS TO REVERSE ROTATION.
3. OPTIONAL THERMOSTATS ARE PROVIDED WHEN SPECIFIED.
4. ACTUAL NUMBER OF INTERNAL PARALLEL CIRCUITS MAY VARY.
5. LEAD COLORS ARE OPTIONAL. LEADS MUST BE NUMBERED AS SHOWN.

CD0006

REV. DESC: ADD CLASS CONN00000007		
REV. LTR: E	VERSION: 01	TDR: 000001099922
FILE: \AAA\00005\141	REVISED: 10:24:49 02/19/2019	BY: ENBRIR0
MTL: –		

BALDOR - RELIANCE®

3PH, SV, 3 LEADS, WYE OR DELTA CONNECTED

SH 1 of 1