35LYE2941

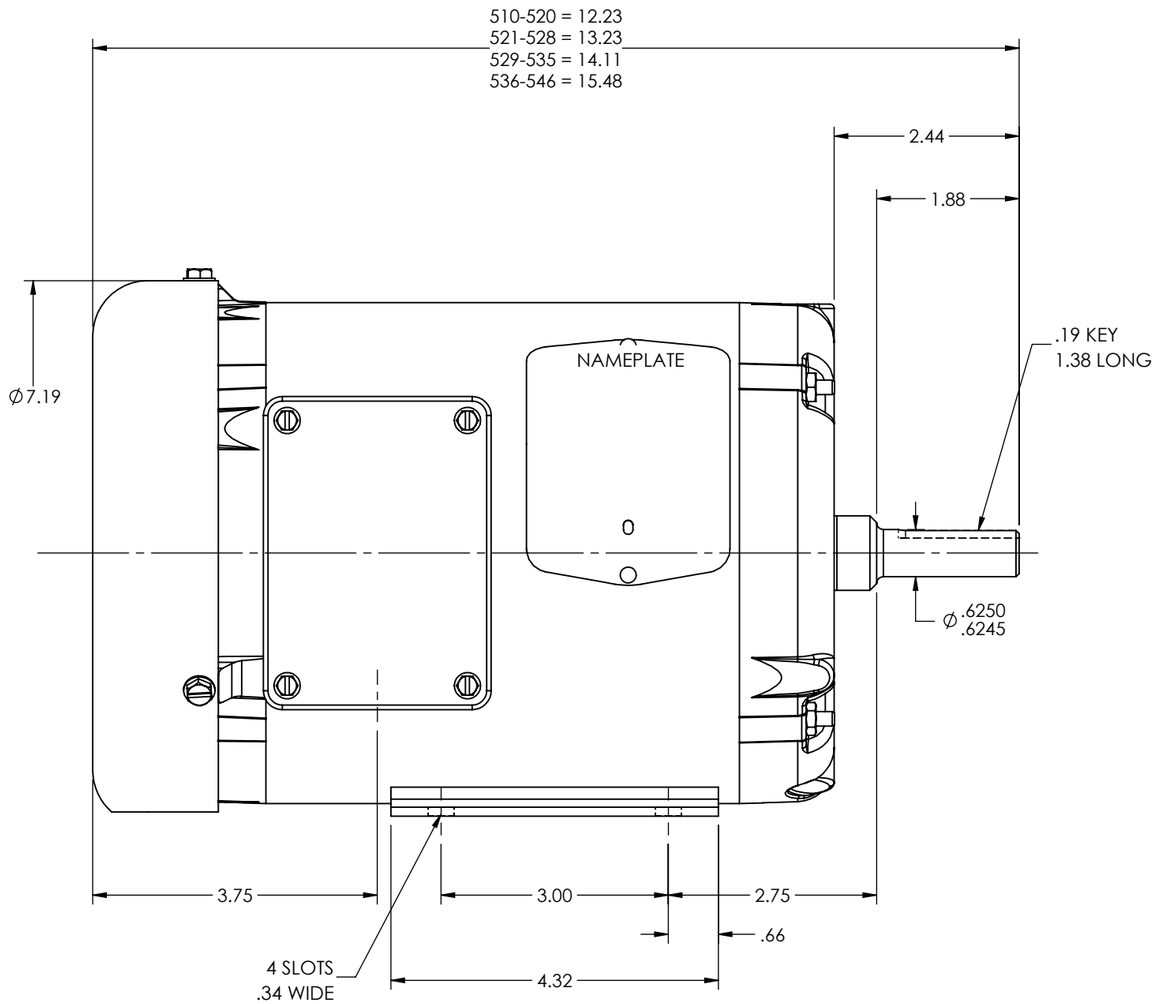

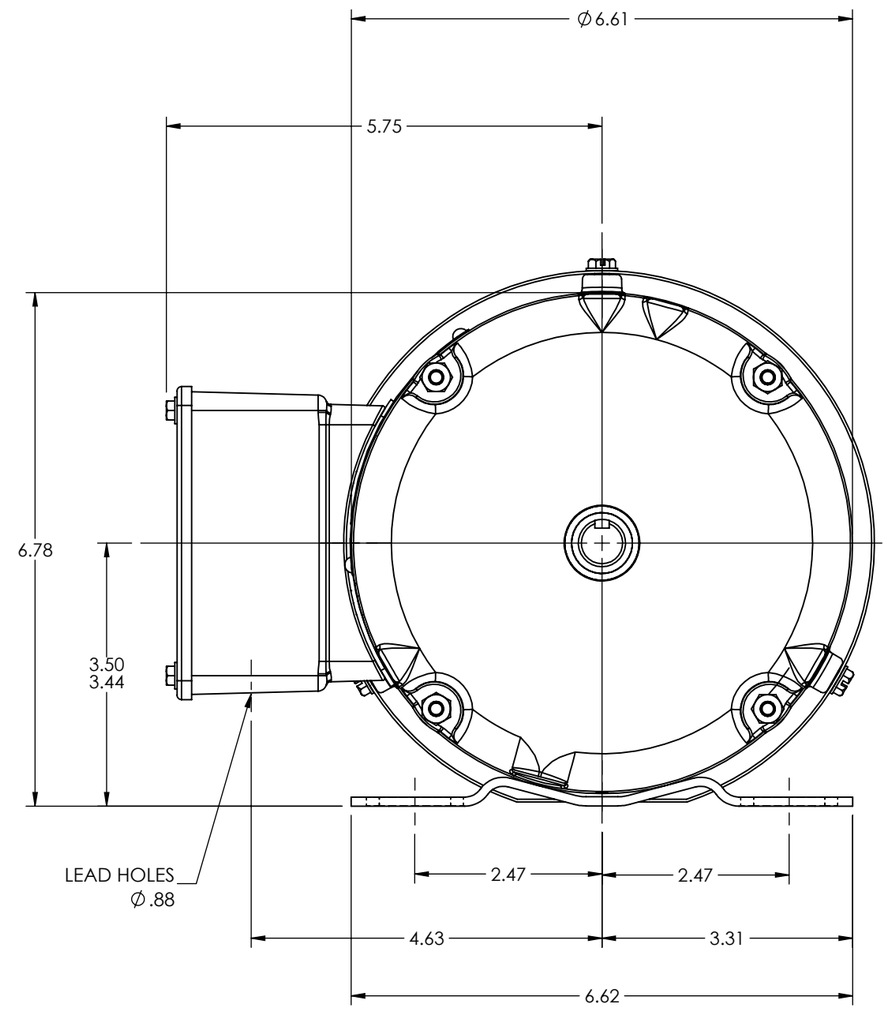

CUSTOMER IS RESPONSIBLE FOR DETERMINING THAT THE PRODUCT WILL PERFORM SUITABLY IN THE INTENDED APPLICATION

REV. DESC: LOADING OF SWD DWG FOR 2D TO 3D CONVERSION PKG 16			
REV: C	VERSION: 03	REVISED: 11:44:53 02/01/2019	TDR: 000001098202
MODEL NO. 35LYE2941			REF: -
BY: ENALEM0			B

BALDOR - RELIANCE®

HORZ 56 TEFC 35M W/35BA4010 (2PL), STD NON-FR & FR WELD SH
SH 1 of 1

35LYE2941