12LYE001

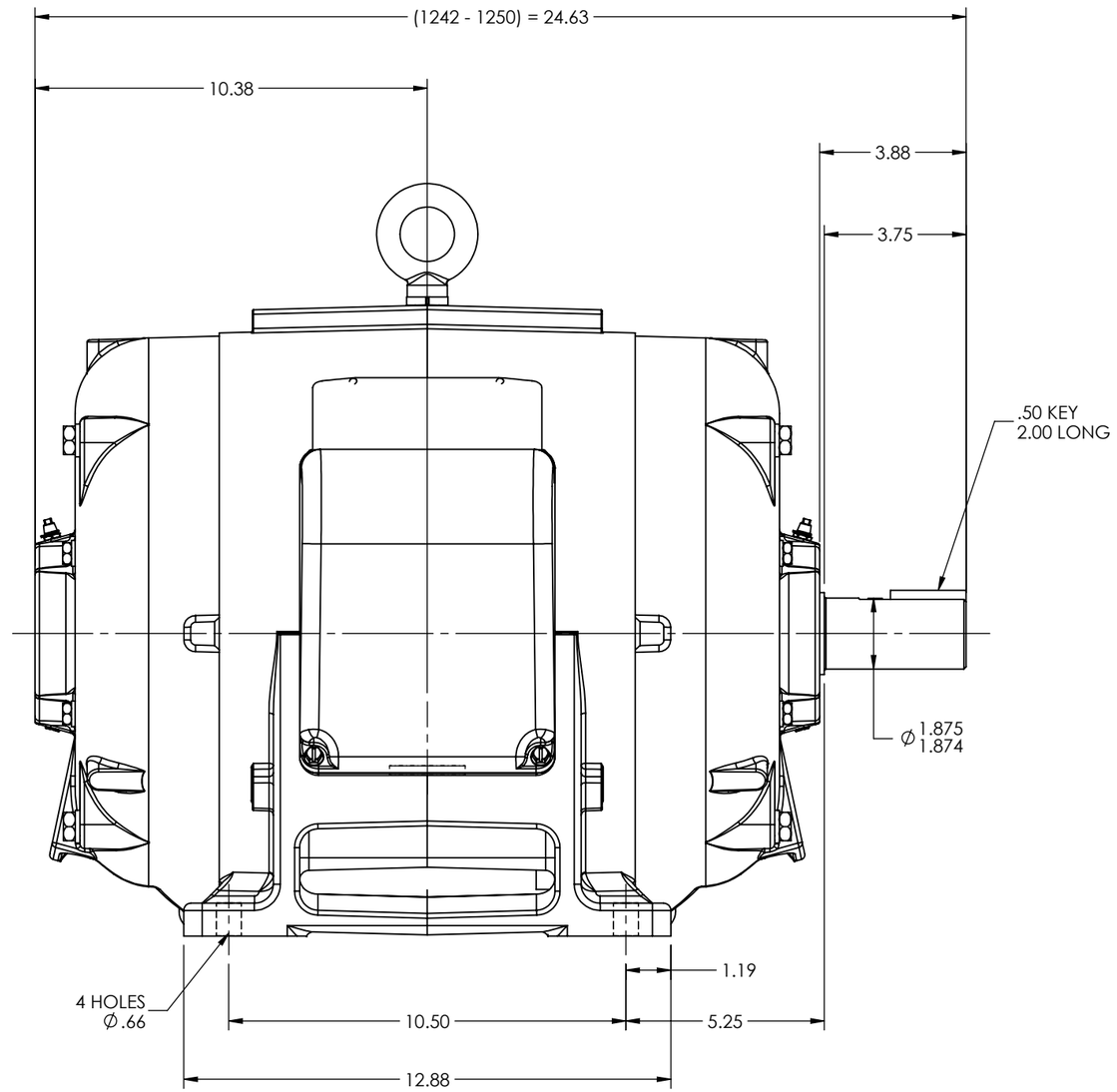

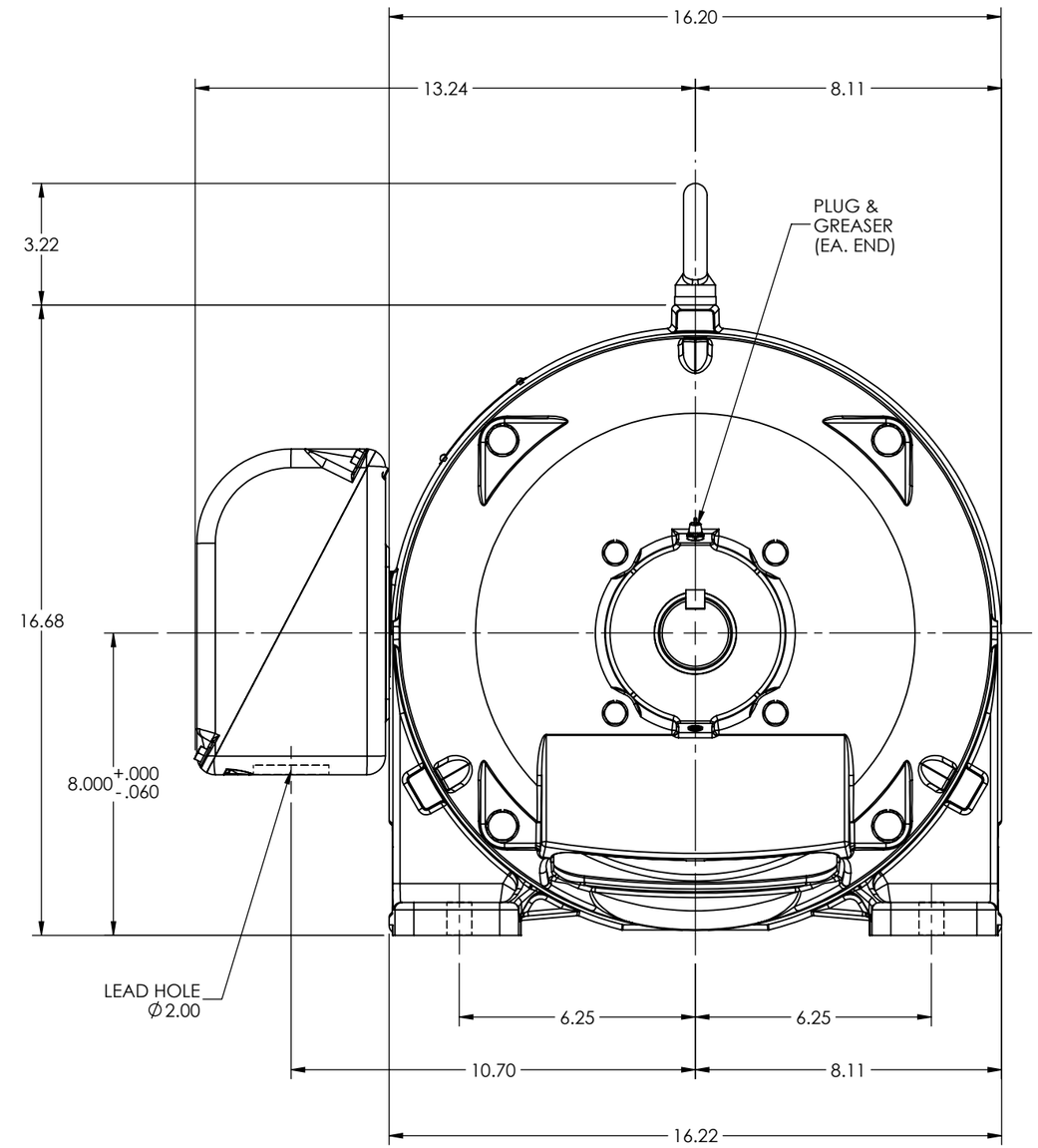

CUSTOMER IS RESPONSIBLE FOR DETERMINING THAT BALDOR'S PRODUCT WILL PERFORM SUITABLY IN THE INTENDED APPLICATION

REV. DESC: LOAD DRAWING TO SOLIDWORKS			
REV: G	VERSION: 04	REVISED: 08:56:10 07/05/2022	TDR: 000001192990
MODEL NO. 12LYE001			REF: -
BY: ENALEM0			B

BALDOR

HORZ OPEN 324TS

12LYE001