40LYG051

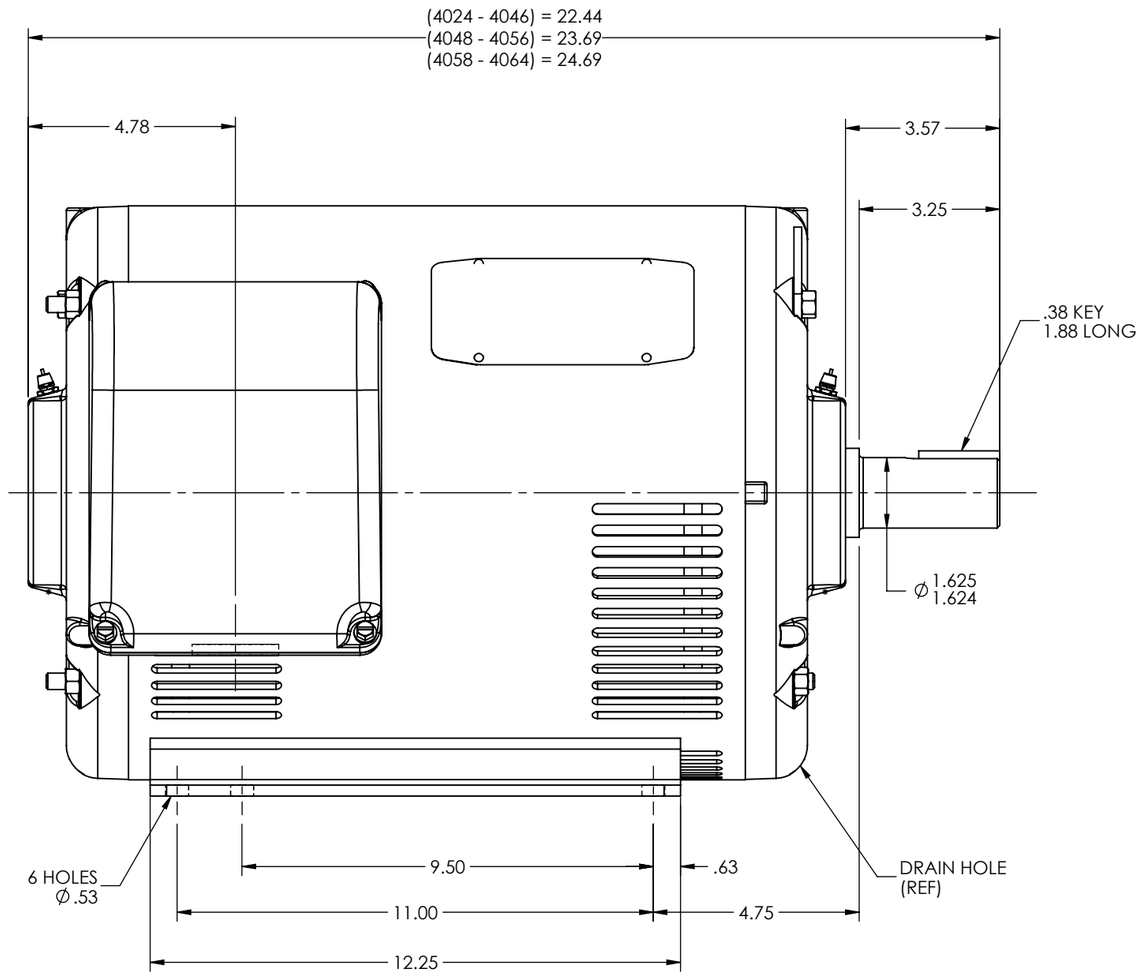

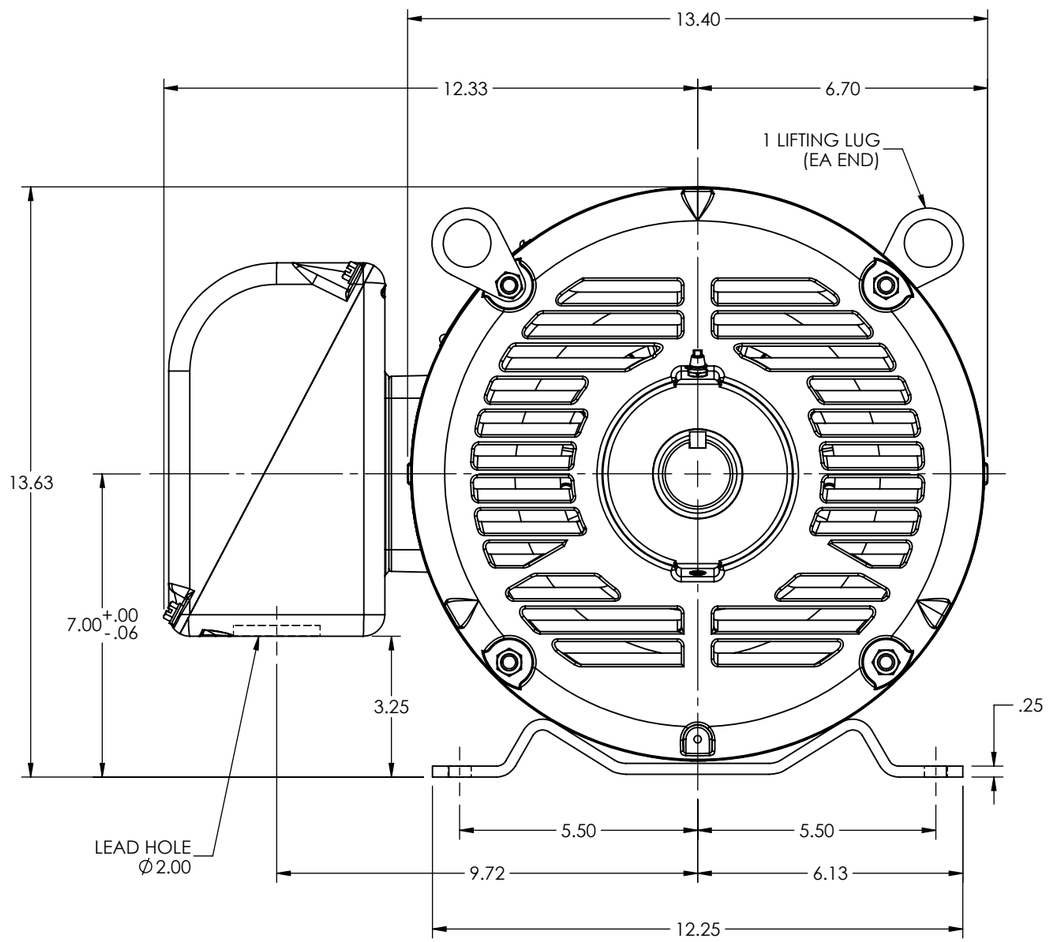

CUSTOMER IS RESPONSIBLE FOR DETERMINING THAT BALDOR'S PRODUCT WILL PERFORM SUITABLY IN THE INTENDED APPLICATION

REV. DESC: CONVERT STOCK LAYOUTS FROM AUTOCAD TO SWD			
REV: J	VERSION: 07	REVISED: 03:04:24 12/14/2023	TDR: 000001220227
MODEL NO. 40LYG051			REF: -
BY: USALMAZ			B

BALDOR

HORZ OPSB 284-6TS SUPER-E

40LYG051