40LYG048

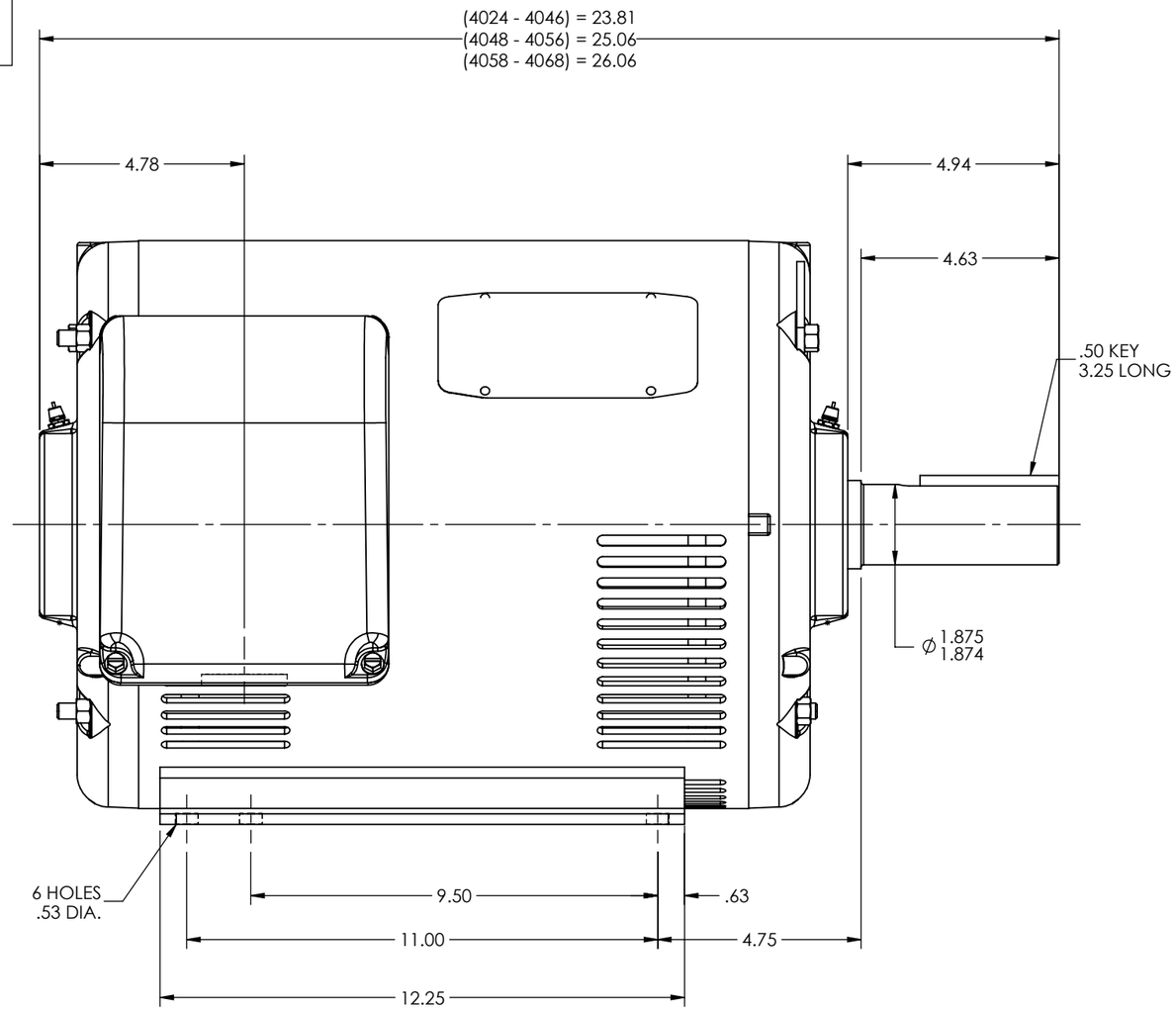

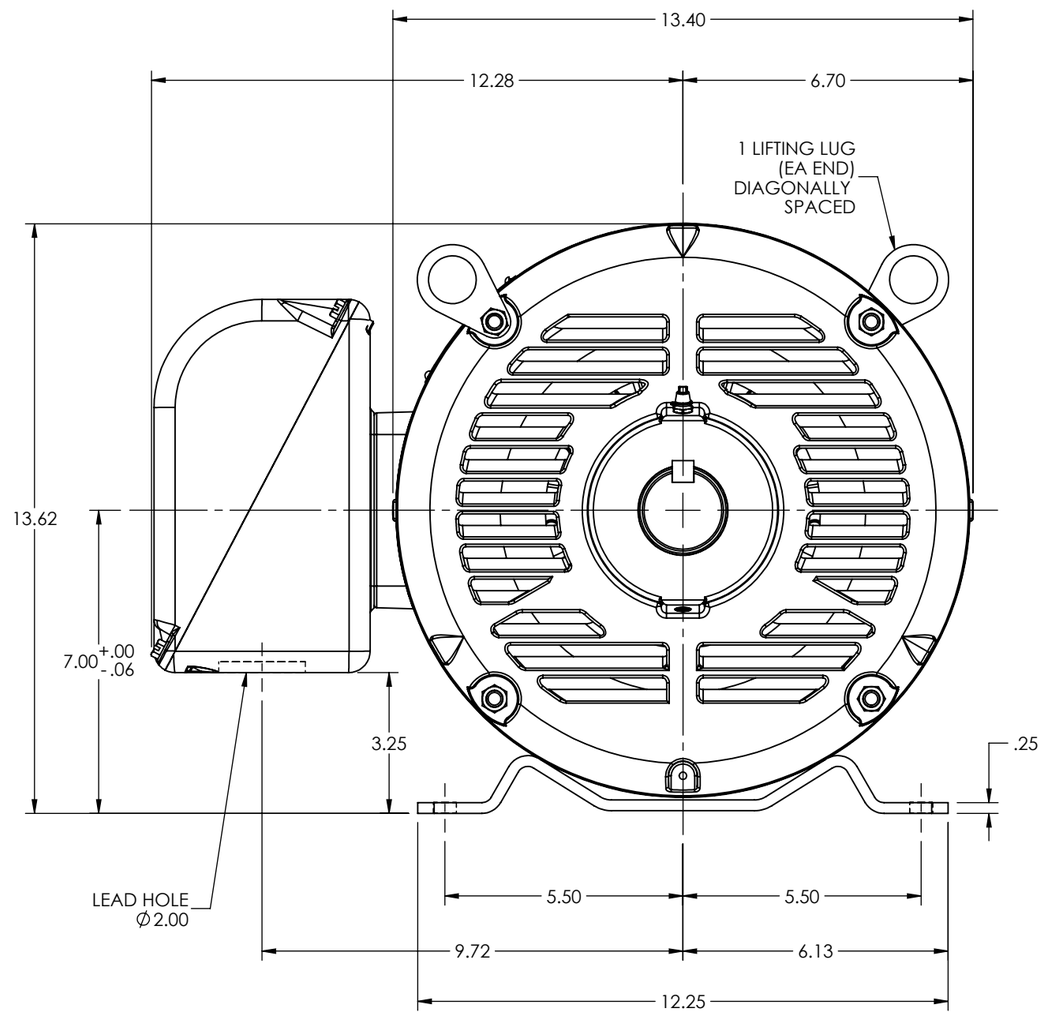

CUSTOMER IS RESPONSIBLE FOR DETERMINING THAT BALDOR'S PRODUCT WILL PERFORM SUITABLY IN THE INTENDED APPLICATION

REV. DESC: CONVERT STOCK LAYOUTS FROM AUTOCAD TO SWD			
REV: M	VERSION: 11	REVISED: 02:51:33 12/14/2023	TDR: 000001220227
MODEL NO. 40LYG048			REF: -
BY: USALMAZ			B

BALDOR

HORZ OPSB 284-6T SUPER-E

40LYG048