ABB BALDOR RELIANCE

# Customer information packet

## EM2280T

52M 8P TEFC HOR 254T
Class - None
Division - Not Applicable

Copyright © All product information within this document is subject to ABB Motors and Mechanical Inc. copyright © protection, unless otherwise noted.
11/28/2026 1:12:27 AM

## Specifications

| | |
|---|---|
| **Enclosure** | TEFC |
| **Frame** | 254T |
| **Frame Material** | Iron |
| **Frequency** | 60.00 Hz |
| **Haz Area Class and Group** | None |
| **Haz Area Division** | Not Applicable |
| **Motor Letter Type** | Three Phase |
| **Output @ Frequency** | 5.000 HP @ 60 HZ |
| **Phase** | 3 |
| **Synchronous Speed @ Frequency** | 900 RPM @ 60 HZ |
| **Voltage @ Frequency** | 460.0 V @ 60 HZ |
| | 230.0 V @ 60 HZ |
| **Agency Approvals** | CURUSEEV |
| | NEMA PREMIUM |
| | NEMA PREMIUM (OLD LOGO) |
| **Ambient Temperature** | 40 °C |
| **Auxiliary Box** | NO AUXILLARY BOX |
| **Auxiliary Box Lead Termination** | None |
| **Base Indicator** | Rigid |
| **Bearing Grease Type** | Polyrex EM (-20F +300F) |
| **Blower** | None |
| **Current @ Voltage** | 17.800 A @ 208.0 V |
| | 8.600 A @ 460.0 V |
| | 17.200 A @ 230.0 V |
| **Design Code** | A |
| **Drip Cover** | No Drip Cover |
| **Duty Rating** | CONT |
| **Efficiency @ 100% Load** | 86.5 % |
| **Electrically Isolated Bearing** | Not Electrically Isolated |
| **Feedback Device** | NO FEEDBACK |
| **Front Shaft Indicator** | None |
| **Heater Indicator** | No Heater |

## Part Detail

| | |
|---|---|
| **Revision** | G |
| **Type** | AC |
| **Mech. spec.** | 09P11 |
| **Base** | |
| **Status** | PRD/A |
| **Elec. spec.** | 09WGT414 |
| **Layout** | 09LYP011 |
| **Eff. date** | 03-19-2024 |
| **CD Diagram** | CD0005 |
| **Poles** | 08 |
| **Leads** | 9#12 |
| **Proprietary** | False |
| **Created date** | 12-16-2021 |

| | |
|---|---|
| **High Voltage Full Load Amps** | 8.6 a |
| **Insulation Class** | F |
| **Inverter Code** | Inverter Ready |
| **KVA Code** | K |
| **Lifting Lugs** | Standard Lifting Lugs |
| **Locked Bearing Indicator** | Locked Bearing |
| **Motor Lead Quantity/Wire Size** | 9 @ 12 AWG |
| **Motor Lead Termination** | Flying Leads |
| **Motor Standards** | NEMA |
| **Motor Type** | 0952M |
| **Mounting Arrangement** | F1 |
| **Number of Poles** | 8 |
| **Overall Length** | 23.36 IN |
| **Power Factor** | 61 |
| **Product Family** | General Purpose |
| **Pulley End Bearing Type** | Ball |
| **Pulley Face Code** | Standard |
| **Pulley Shaft Indicator** | Standard |
| **Rodent Screen** | None |
| **RoHS Status** | ROHS NON-COMPLIANT |
| **Service Factor** | 1.15 |
| **Shaft Diameter** | 1.625 IN |
| **Shaft Ground Indicator** | No Shaft Grounding |
| **Shaft Rotation** | Reversible |
| **Shaft Slinger Indicator** | Shaft Slinger |
| **Speed** | 880 rpm |
| **Speed Code** | Single Speed |
| **Starting Method** | Direct on line |
| **Thermal Device - Bearing** | None |
| **Thermal Device - Winding** | None |
| **Vibration Sensor Indicator** | No Vibration Sensor |
| **Winding Thermal 1** | None |
| **Winding Thermal 2** | None |

**Nameplate**

| NP3441LUA | | | | | | | | | | |
|---|---|---|---|---|---|---|---|---|---|---|
| **CAT.NO.** | EM2280T | | | | | | | | | |
| **SPEC** | 09P011T414 | | | | | | | | | |
| **HP** | 5 | | | | | | | | | |
| **VOLTS** | 230/460 | | | | | | | | | |
| **AMPS** | 17.2/8.6 | | | | | | | | | |
| **RPM** | 880 | | | | | | | | | |
| **FRAME** | 254T | **HZ** | 60 | **PH** | 3 | | | | | |
| **SF** | 1.15 | **CODE** | K | **DES** | A | **CLASS** | F | | | |
| **NEMA NOM. EFF** | 86.5 | **PF** | 61 | | | | | | | |
| **RATING** | 40C AMB-CONT | | | | | | | | | |
| **CC** | 010A | | | | | | | | | |
| **ENCL** | TEFC | **SER** | | | | | | | | |
| **DE** | 6309 | **ODE** | 6208 | | | | | | | |
| **VPWM INVERTER READY** | SFA 19/9.5 | | | | | | | | | |
| **CT6-60H(10:1)VT3-60H(20:1** | | | | | | | | | | |
| | 50HZ 5HP 190/380V 19.6/9.8A | | | | | | | | | SF1.0 |

**AC Induction Motor Performance Data**
Record # 62448
Typical performance - not guaranteed values

| **Winding:** 09WGT414-R001 | **Type:** 0952M | **Enclosure:** TEFC |
|---|---|---|

| **Nameplate Data** | | | | **460 V, 60 Hz: High Voltage Connection** | |
|---|---|---|---|---|---|
| **Rated Output (HP)** | | | 5 | **Full Load Torque** | 29.55 LB-FT |
| **Volts** | | | 230/460 | **Start Configuration** | direct on line |
| **Full Load Amps** | | | 17.2/8.6 | **Breakdown Torque** | 82 LB-FT |
| **R.P.M.** | | | 880 | **Pull-up Torque** | 46.8 LB-FT |
| **Hz** | 60 | **Phase** | 3 | **Locked-rotor Torque** | 72.2 LB-FT |
| **NEMA Design Code** | A | **KVA Code** | K | **Starting Current** | 53.5 A |
| **Service Factor (S.F.)** | | | 1.15 | **No-load Current** | 5.53 A |
| **NEMA Nom. Eff.** | 86.5 | **Power Factor** | 61 | **Line-line Res. @ 25ºC** | 1.6349 Ω |
| **Rating - Duty** | | | 40C AMB-CONT | **Temp. Rise @ Rated Load** | 42°C |
| **S.F. Amps** | | | 19/9.5 | **Temp. Rise @ S.F. Load** | 50°C |
| | | | | **Locked-rotor Power Factor** | 27.3 |
| | | | | **Rotor inertia** | 4.19 lb-ft² |

**Load Characteristics 460 V, 60 Hz, 5 HP**

| **% of Rated Load** | **25** | **50** | **75** | **100** | **125** | **150** | **S.F.** |
|---|---|---|---|---|---|---|---|
| **Power Factor** | 26 | 42 | 54 | 61 | 66 | 70 | 64 |
| **Efficiency** | 78.6 | 86 | 87.9 | 88.2 | 87.6 | 86.6 | 87.8 |
| **Speed** | 896.5 | 893.4 | 889.8 | 886 | 882.1 | 877.6 | 884 |
| **Line amperes** | 5.8 | 6.45 | 7.42 | 8.62 | 10 | 11.7 | 9.45 |

ABB Motors and Mechanical Inc.

WINDING # 09WGT414

5 HP 3 PH 60 HZ 880 RPM 460 V 0952M

Typical performance - not guaranteed values.

TORQUES(LB-FT): PO=82 PU=46.8 LR=72.2 LRA=53.5

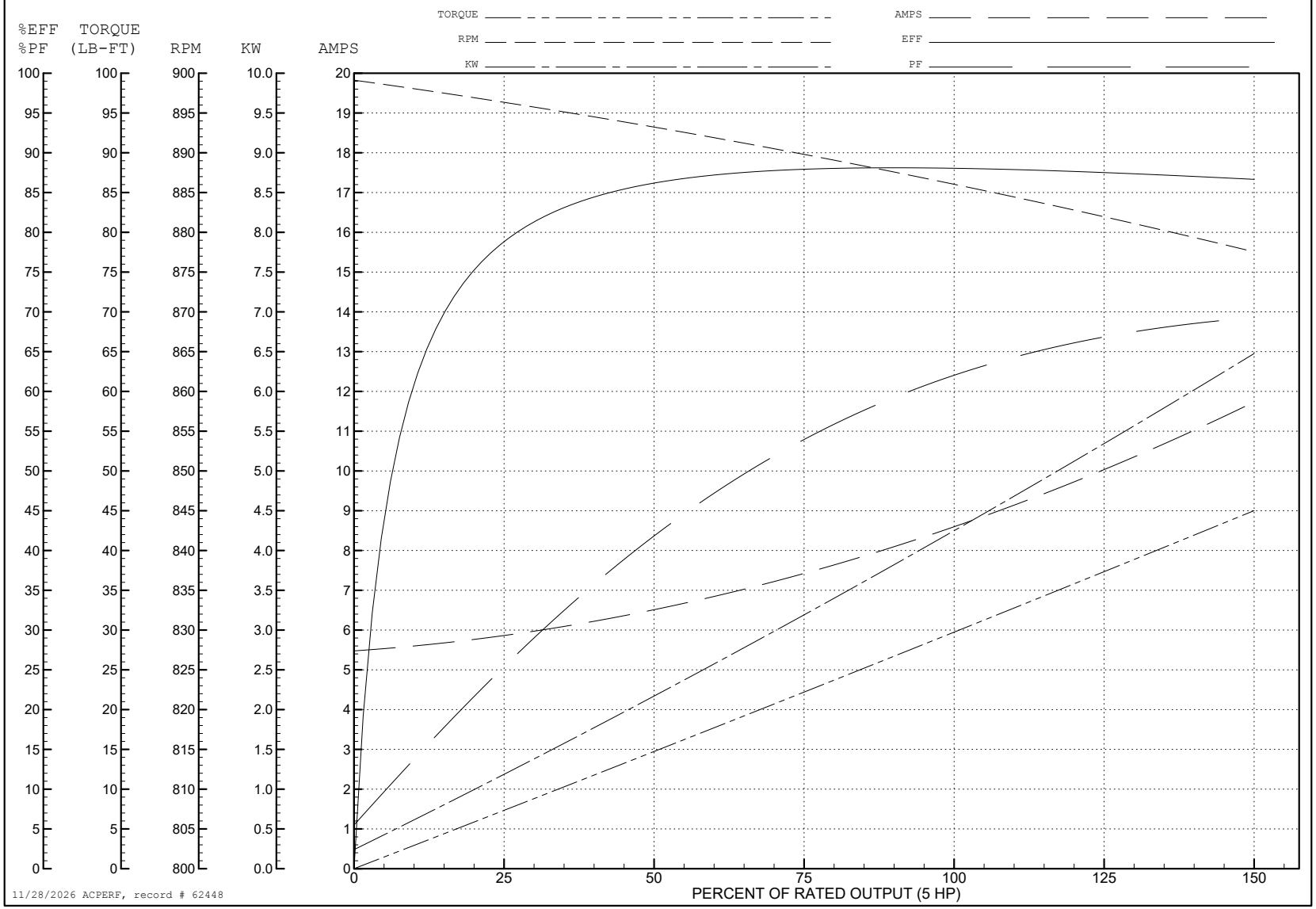


11/28/2026 ACPERF, record # 62448

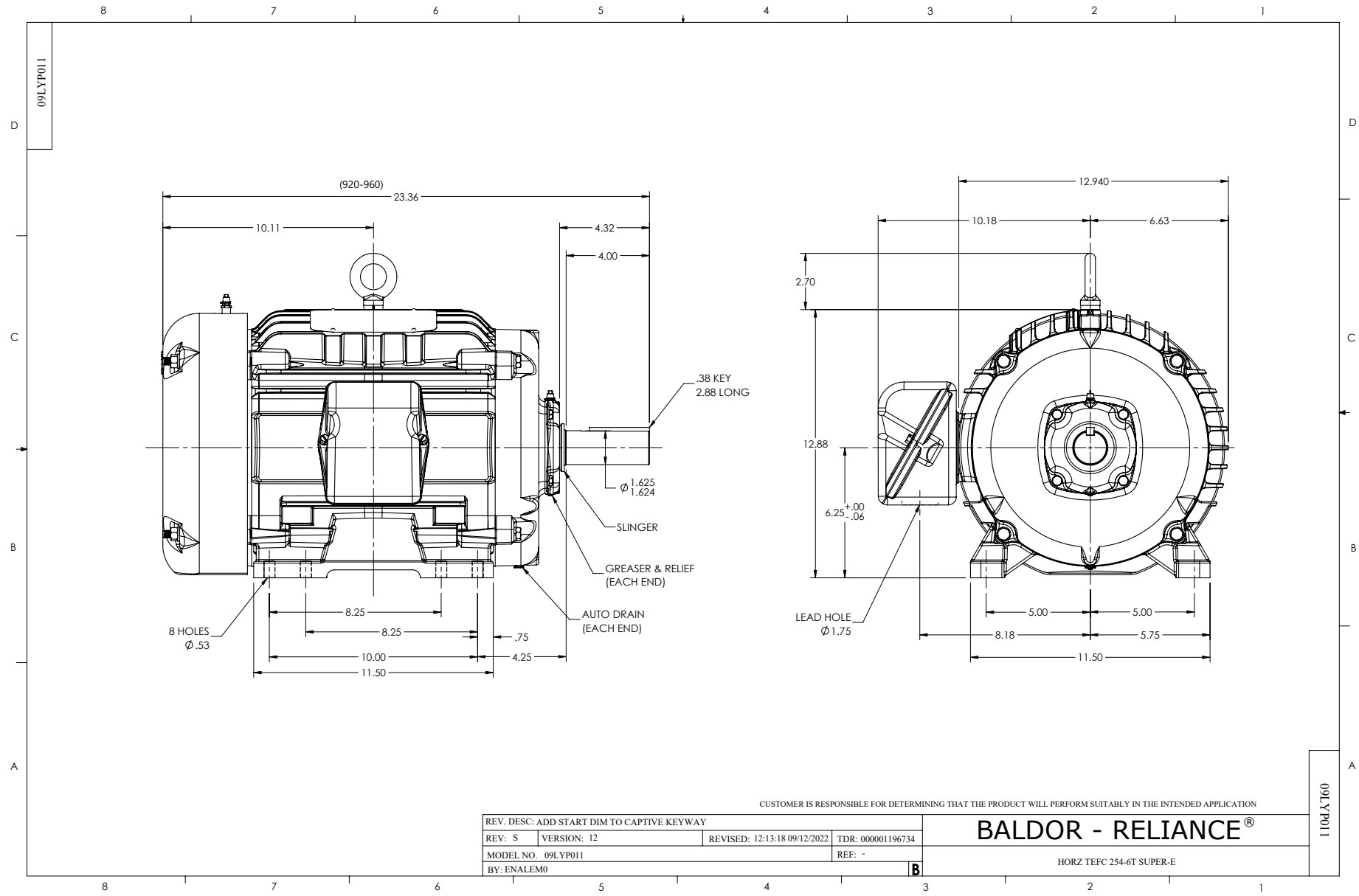
09LYP011
(920-960)
23.36
10.11
4.32
4.00
.38 KEY
2.88 LONG
Ø 1.625
1.624
SLINGER
GREASER & RELIEF
(EACH END)
AUTO DRAIN
(EACH END)
8 HOLES
Ø .53
8.25
8.25
.75
10.00
4.25
11.50
12.940
10.18
6.63
2.70
12.88
6.25 +.00 -.06
LEAD HOLE
Ø 1.75
5.00
5.00
8.18
5.75
11.50
CUSTOMER IS RESPONSIBLE FOR DETERMINING THAT THE PRODUCT WILL PERFORM SUITABLY IN THE INTENDED APPLICATION
REV. DESC: ADD START DIM TO CAPTIVE KEYWAY
REV: S
VERSION: 12
REVISED: 12:13:18 09/12/2022
TDR: 000001196734
MODEL NO. 09LYP011
REF: -
BY: ENALEM0
B
BALDOR - RELIANCE®
HORZ TEFC 254-6T SUPER-E
09LYP011

CD0005

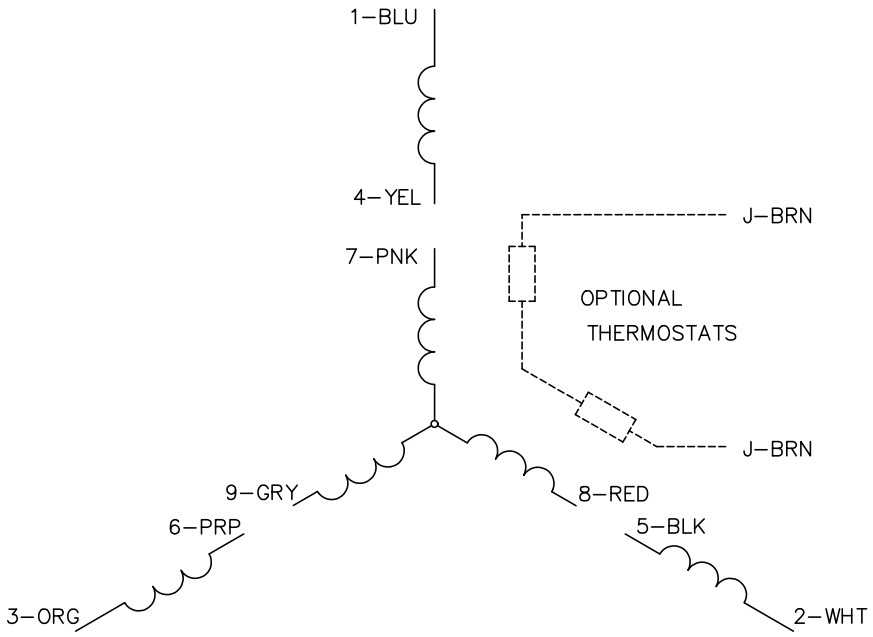


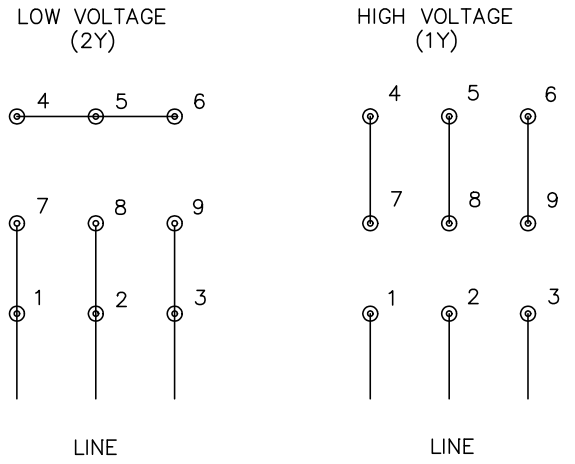


NOTES:

1. INTERCHANGE ANY TWO LINE LEADS TO REVERSE ROTATION.
2. OPTIONAL THERMOSTATS ARE PROVIDED WHEN SPECIFIED.
3. ACTUAL NUMBER OF INTERNAL PARALLEL CIRCUITS MAY BE A MULTIPLE OF THOSE SHOWN ABOVE.
4. LEAD COLORS ARE OPTIONAL. LEADS MUST ALWAYS BE NUMBERED AS SHOWN.

CD0005

| | | | |
|---|---|---|---|
| REV. DESC: REVISE TO SHOW OPTIONAL COLORS | | | BALDOR ELECTRIC Co. |
| REV. LTR: E | BY: JLP | REVISED: 01/19/99 10:15 | TDR: 0171435 |
| CD0005 | | FILE: AAA00005140 | MDL: – |
| | | MTL: – | 3PH, DV, 9 LEADS |