ABB BALDOR RELIANCE

Customer information packet

EM2276

7.5HP, 1180RPM, 3PH, 60HZ, 256U, 0954M, TEFC, F
Class - None
Division - Not Applicable

Copyright © All product information within this document is subject to ABB Motors and Mechanical Inc. copyright © protection, unless otherwise noted.
11/28/2026 1:12:21 AM

Specifications

Enclosure	TEFC
Frame	256U
Frame Material	Iron
Frequency	60.00 Hz
Haz Area Class and Group	None
Haz Area Division	Not Applicable
Motor Letter Type	Three Phase
Output @ Frequency	7.500 HP @ 60 HZ
Phase	3
Synchronous Speed @ Frequency	1200 RPM @ 60 HZ
Voltage @ Frequency	460.0 V @ 60 HZ
	230.0 V @ 60 HZ
Agency Approvals	CURUSEEV
	NEMA PREMIUM
	NEMA PREMIUM (OLD LOGO)
Ambient Temperature	40 °C
Auxiliary Box	NO AUXILLARY BOX
Auxiliary Box Lead Termination	None
Base Indicator	Rigid
Bearing Grease Type	Polyrex EM (-20F +300F)
Blower	None
Current @ Voltage	21.400 A @ 230.0 V
	25.000 A @ 208.0 V
	10.700 A @ 460.0 V
Design Code	A
Drip Cover	No Drip Cover
Duty Rating	CONT
Efficiency @ 100% Load	91.0 %
Electrically Isolated Bearing	Not Electrically Isolated
Feedback Device	NO FEEDBACK
Front Face Code	Standard
Front Shaft Indicator	None

Part Detail

Revision	S
Type	AC
Mech. spec.	09C111
Base	
Status	PRD/A
Elec. spec.	09WGX827
Layout	09LYC111
Eff. date	11-14-2023
CD Diagram	CD0005
Poles	06
Leads	9#12
Proprietary	False
Created date	05-29-2015

Heater Indicator	No Heater
High Voltage Full Load Amps	10.7 a
Insulation Class	F
Inverter Code	Inverter Ready
IP Rating	NONE
KVA Code	J
Lifting Lugs	Standard Lifting Lugs
Locked Bearing Indicator	Locked Bearing
Motor Lead Exit	Ko Box
Motor Lead Quantity/Wire Size	9 @ 12 AWG
Motor Lead Termination	Flying Leads
Motor Standards	NEMA
Motor Type	0954M
Mounting Arrangement	F1
Number of Poles	6
Overall Length	23.11 IN
Power Factor	71
Product Family	General Purpose
Pulley End Bearing Type	Ball
Pulley Face Code	Standard
Pulley Shaft Indicator	Standard
Rodent Screen	None
Service Factor	1.15
Shaft Diameter	1.375 IN
Shaft Extension Location	Pulley End
Shaft Ground Indicator	No Shaft Grounding
Shaft Rotation	Reversible
Shaft Slinger Indicator	Shaft Slinger
Speed	1180 rpm
Speed Code	Single Speed
Starting Method	Direct on line
Thermal Device - Bearing	None
Thermal Device - Winding	None
Vibration Sensor Indicator	No Vibration Sensor

Winding Thermal 1	None
Winding Thermal 2	None

Nameplate

NP1259L											
CAT.NO.	EM2276										
SPEC.	09C111X827G1										
HP	7.5										
VOLTS	230/460										
AMP	21.4/10.7										
RPM	1180										
FRAME	256U	**HZ**	60			**PH**	3				
SER.F.	1.15	**CODE**	J	**DES**	A	**CL**	F				
NEMA-NOM-EFF	91	**PF**	71								
RATING	40C AMB-CONT										
CC	010A										
DE	6309	**ODE**	6208								
ENCL	TEFC	**SN**									

AC Induction Motor Performance Data
Record # 1770
Typical performance - not guaranteed values

Winding: 09WGX827-R001	**Type:** 0954M	**Enclosure:** TEFC

Nameplate Data				**460 V, 60 Hz: High Voltage Connection**	
Rated Output (HP)			7.5	**Full Load Torque**	32.4 LB-FT
Volts			230/460	**Start Configuration**	direct on line
Full Load Amps			21.4/10.7	**Breakdown Torque**	99.2 LB-FT
R.P.M.			1180	**Pull-up Torque**	39.4 LB-FT
Hz	60	**Phase**	3	**Locked-rotor Torque**	57.8 LB-FT
NEMA Design Code	A	**KVA Code**	J	**Starting Current**	72.5 A
Service Factor (S.F.)			1.15	**No-load Current**	5.84 A
NEMA Nom. Eff.	91	**Power Factor**	71	**Line-line Res. @ 25ºC**	0.89 Ω
Rating - Duty			40C AMB-CONT	**Temp. Rise @ Rated Load**	31°C
S.F. Amps				**Temp. Rise @ S.F. Load**	36°C
				Locked-rotor Power Factor	25.8
				Rotor inertia	4.34 LB-FT2

Load Characteristics 460 V, 60 Hz, 7.5 HP

% of Rated Load	**25**	**50**	**75**	**100**	**125**	**150**	**S.F.**
Power Factor	32	52	63	71	73	75	72
Efficiency	83	89.7	91.5	91.5	91.8	91.2	91.9
Speed	1196	1192	1189	1184	1179	1173	1181
Line amperes	6.34	7.49	8.87	10.7	12.9	15.7	12

ABB Motors and Mechanical Inc.

WINDING # 09WGX827

7.5 HP 3 PH 60 HZ 1180 RPM 460 V 0954M

Typical performance - not guaranteed values.

TORQUES(LB-FT): PO=99.2 PU=39.4 LR=57.8 LRA=72.5

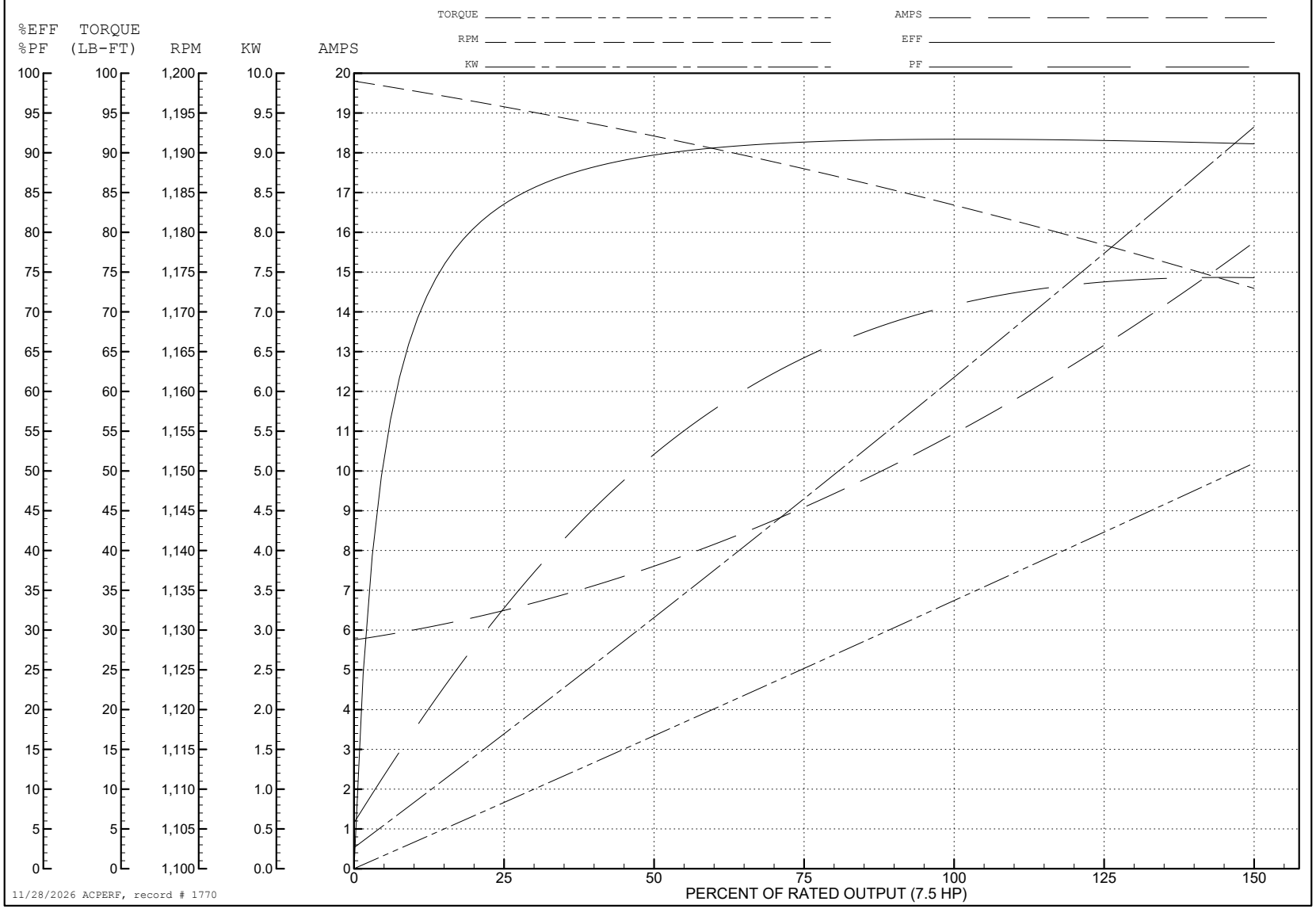

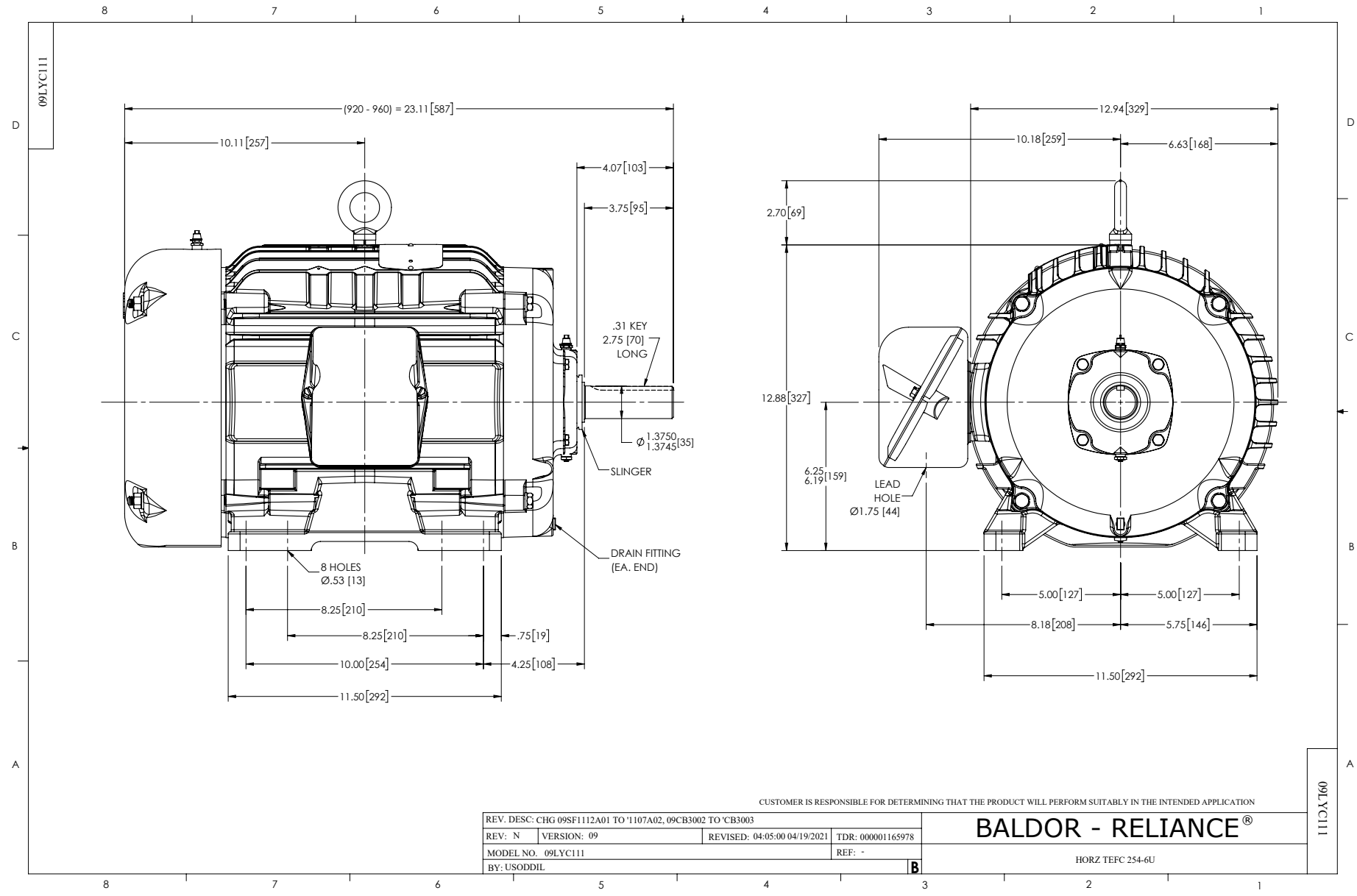
09LYC111
(920 - 960) = 23.11 [587]
10.11 [257]
4.07 [103]
3.75 [95]
.31 KEY
2.75 [70]
LONG
Ø 1.3750
1.3745 [35]
SLINGER
DRAIN FITTING
(EA. END)
8 HOLES
Ø.53 [13]
8.25 [210]
8.25 [210]
.75 [19]
10.00 [254]
4.25 [108]
11.50 [292]
12.94 [329]
10.18 [259]
6.63 [168]
2.70 [69]
12.88 [327]
6.25
6.19 [159]
LEAD
HOLE
Ø1.75 [44]
5.00 [127]
5.00 [127]
8.18 [208]
5.75 [146]
11.50 [292]
CUSTOMER IS RESPONSIBLE FOR DETERMINING THAT THE PRODUCT WILL PERFORM SUITABLY IN THE INTENDED APPLICATION
REV. DESC: CHG 09SF1112A01 TO '1107A02, 09CB3002 TO 'CB3003
REV: N
VERSION: 09
REVISED: 04:05:00 04/19/2021
TDR: 000001165978
MODEL NO. 09LYC111
REF: -
BY: USODDIL
B
BALDOR - RELIANCE®
HORZ TEFC 254-6U
09LYC111

CD0005

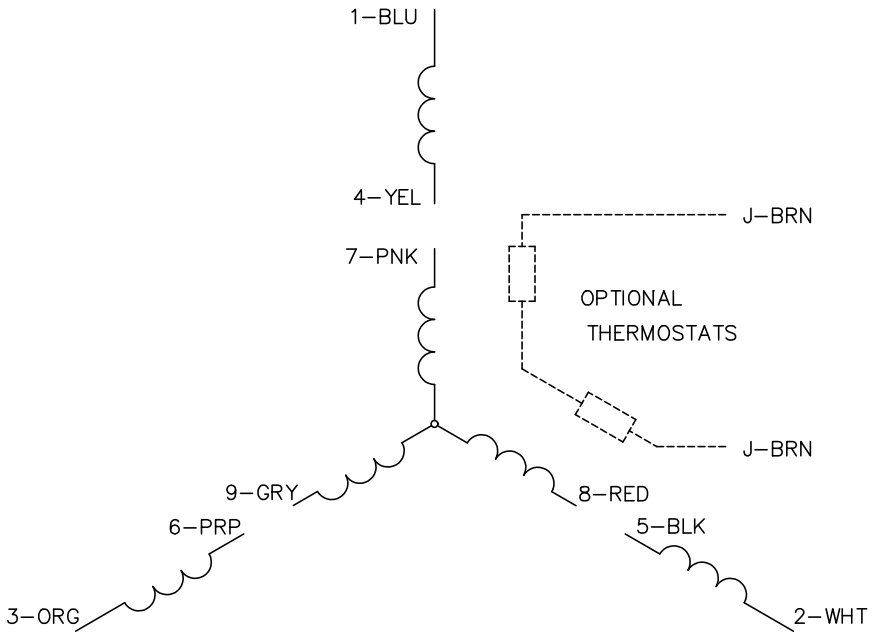

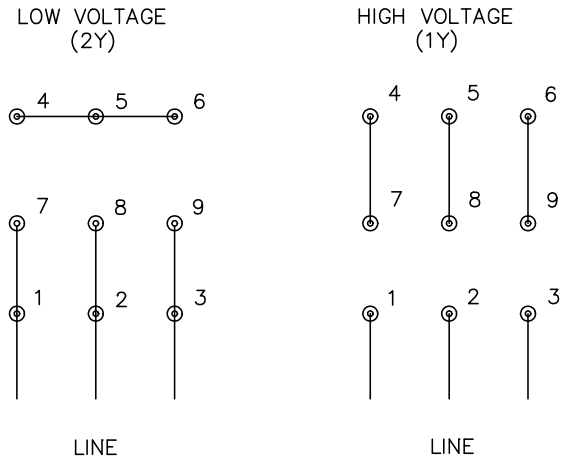

NOTES:

1. INTERCHANGE ANY TWO LINE LEADS TO REVERSE ROTATION.
2. OPTIONAL THERMOSTATS ARE PROVIDED WHEN SPECIFIED.
3. ACTUAL NUMBER OF INTERNAL PARALLEL CIRCUITS MAY BE A MULTIPLE OF THOSE SHOWN ABOVE.
4. LEAD COLORS ARE OPTIONAL. LEADS MUST ALWAYS BE NUMBERED AS SHOWN.

CD0005

REV. DESC: REVISE TO SHOW OPTIONAL COLORS			BALDOR ELECTRIC Co.
REV. LTR: E	BY: JLP	REVISED: 01/19/99 10:15	TDR: 0171435
CD0005		FILE: AAA00005140	MDL: –
		MTL: –	3PH, DV, 9 LEADS