12LYH062

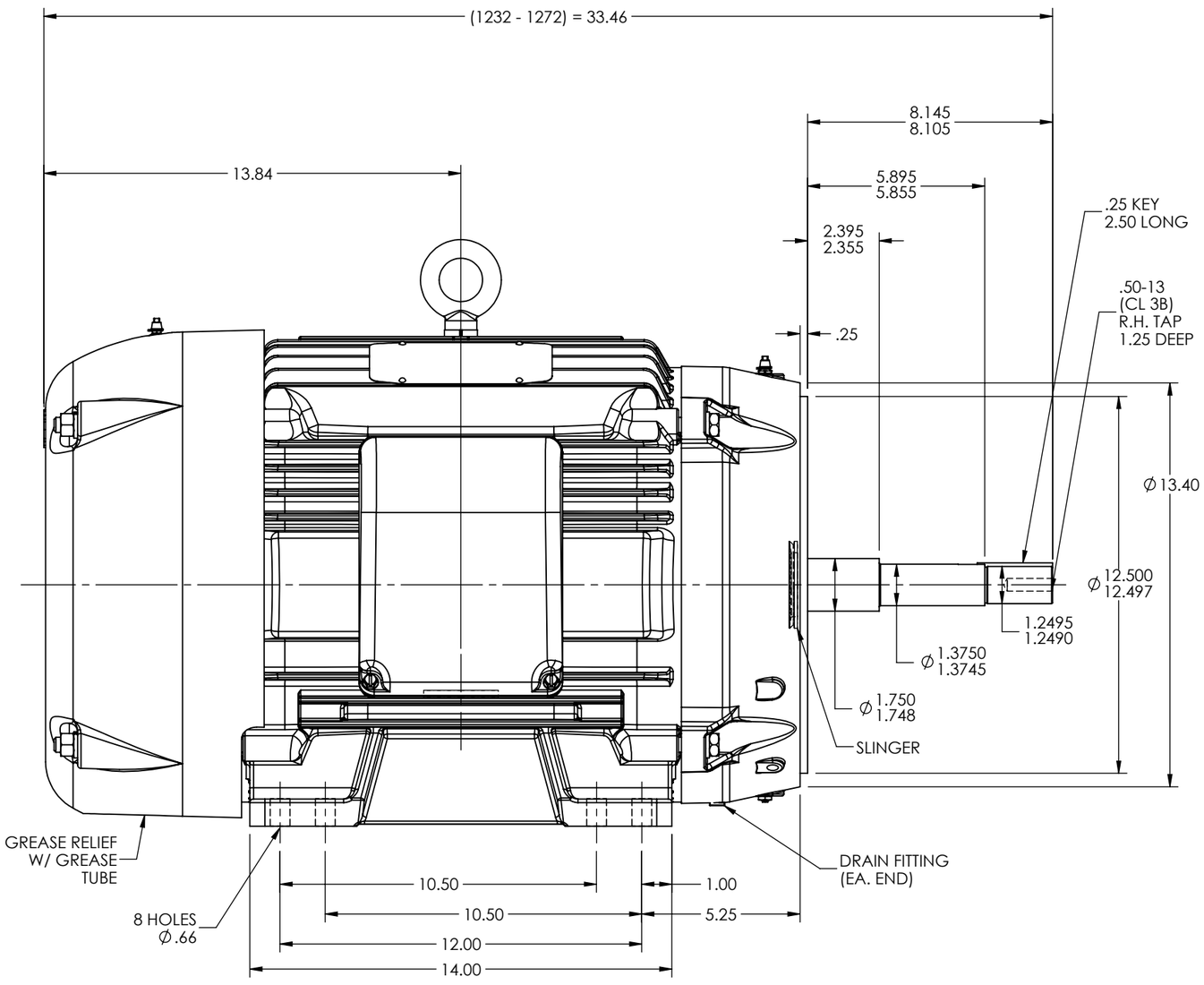

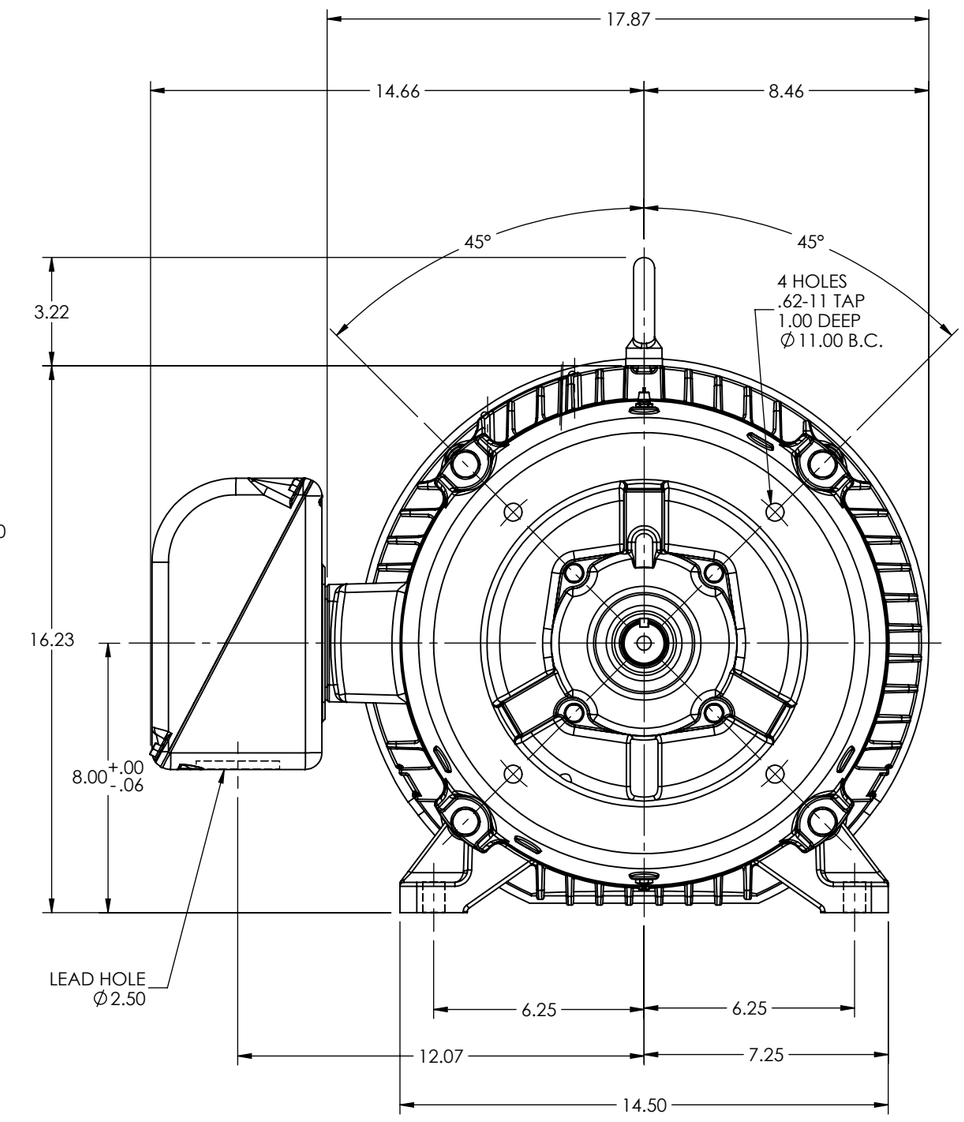

CUSTOMER IS RESPONSIBLE FOR DETERMINING THAT BALDOR'S PRODUCT WILL PERFORM SUITABLY IN THE INTENDED APPLICATION

REV. DESC: FIX KO TO MATCH BOM			
REV: M	VERSION: 07	REVISED: 03:16:32 07/12/2022	TDR: 000001193696
MODEL NO. 12LYH062			REF: -
BY: ENALEM0			B

BALDOR

HORZ TEFC 324-6JP; .50-13 SHAFT TAP

12LYH062