42LYG038

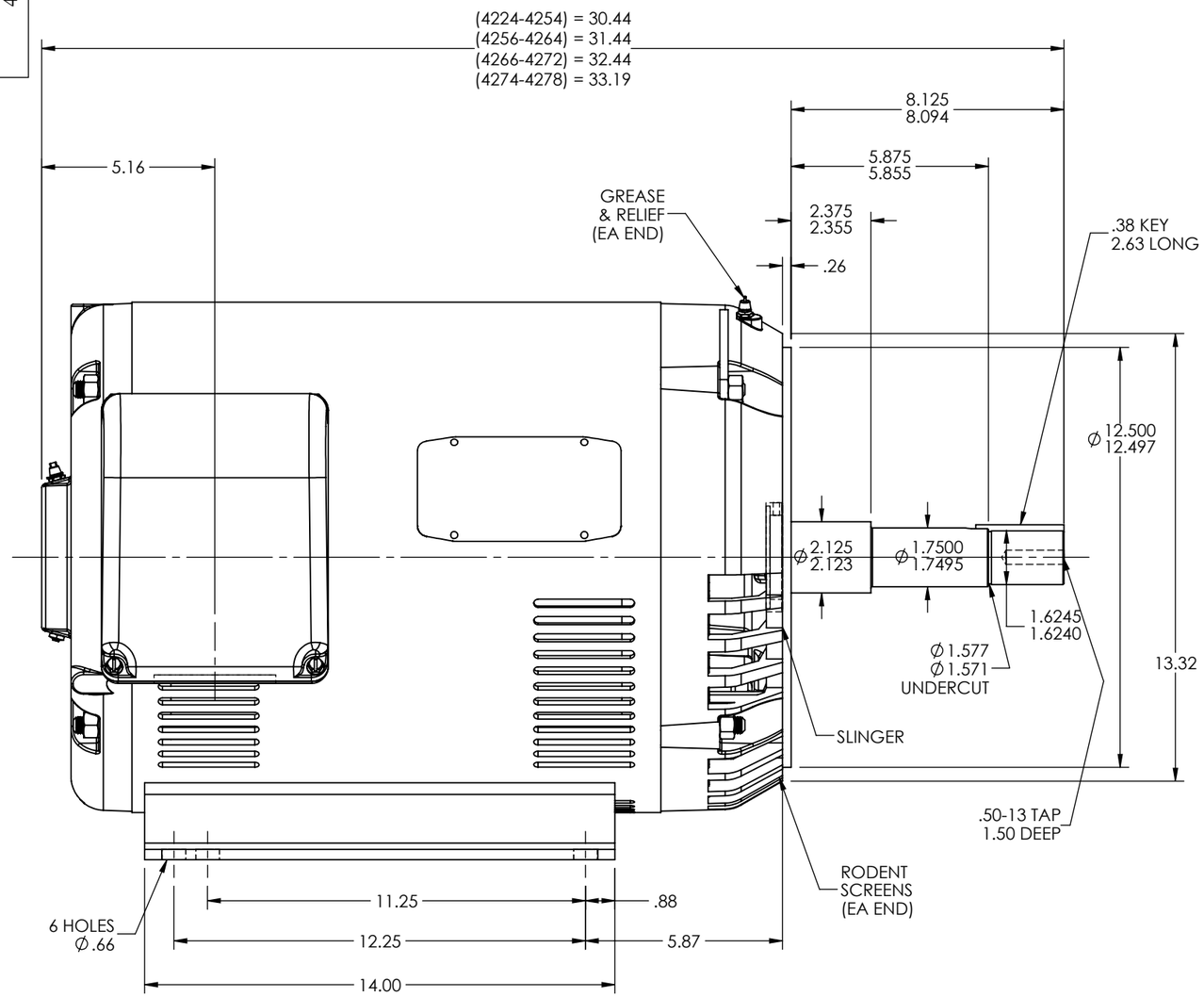

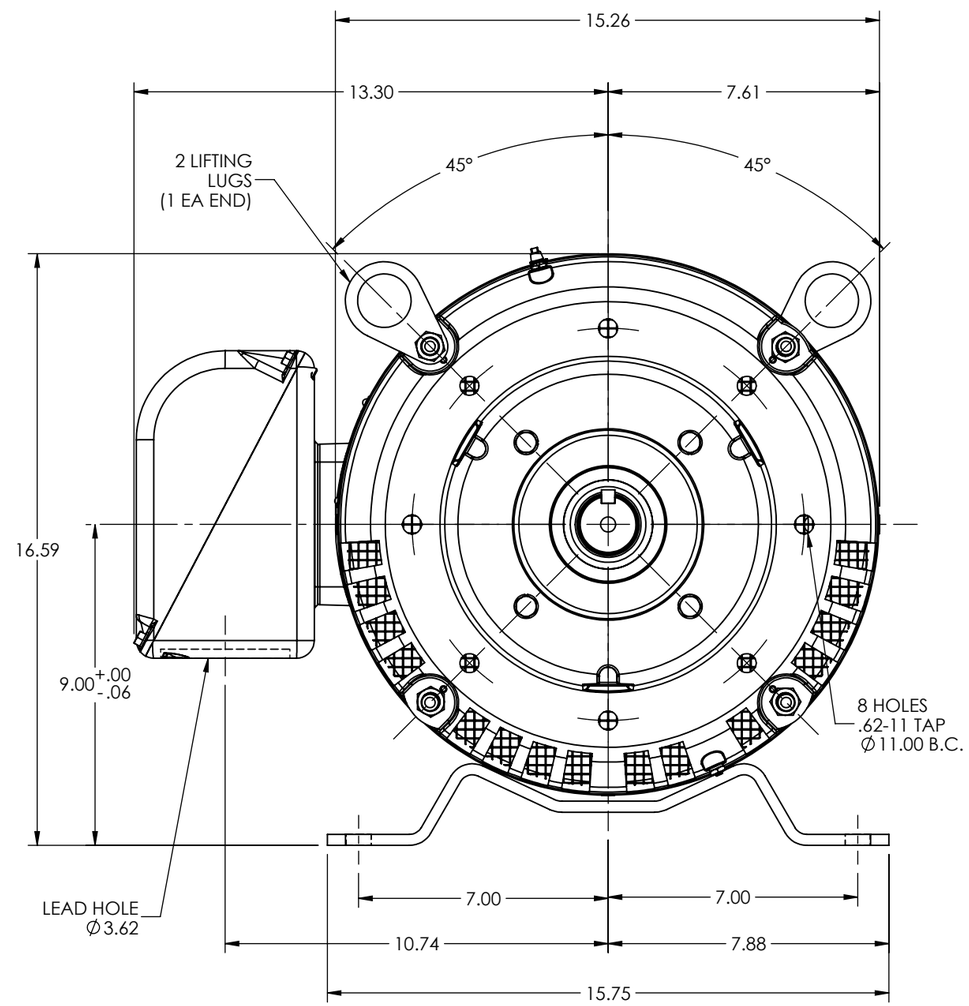

CUSTOMER IS RESPONSIBLE FOR DETERMINING THAT BALDOR'S PRODUCT WILL PERFORM SUITABLY IN THE INTENDED APPLICATION

REV. DESC: CONVERT DRW FROM AUTOCAD TO SWD			
REV: J	VERSION: 04	REVISED: 01:35:33 11/10/2023	TDR: 000001220227
MODEL NO. 42LYG038			REF: -
BY: USALMAZ			B

BALDOR

HOR OPSB 364-5JP; RODENT SCREENS

42LYG038