40LY-000-066

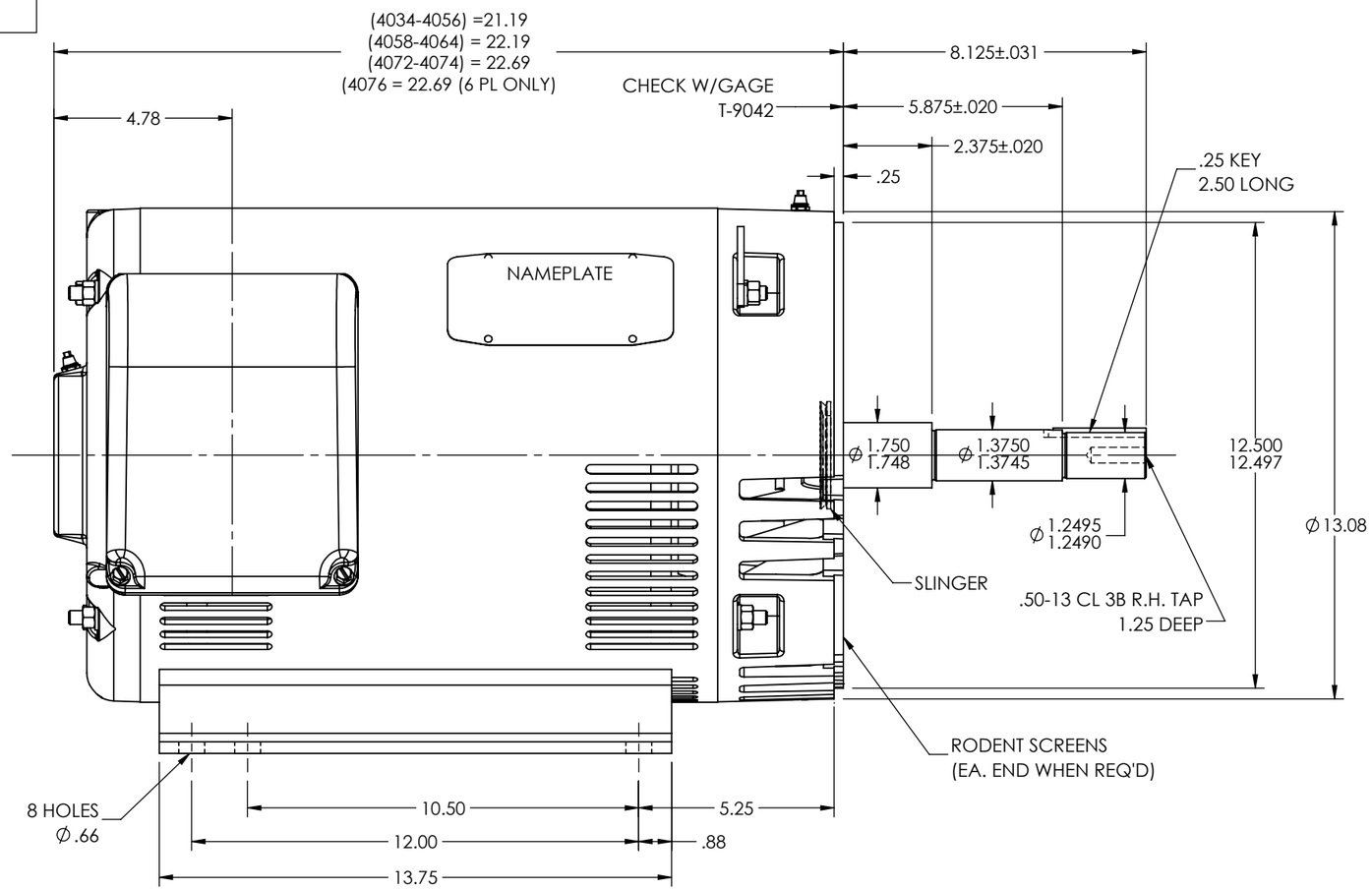

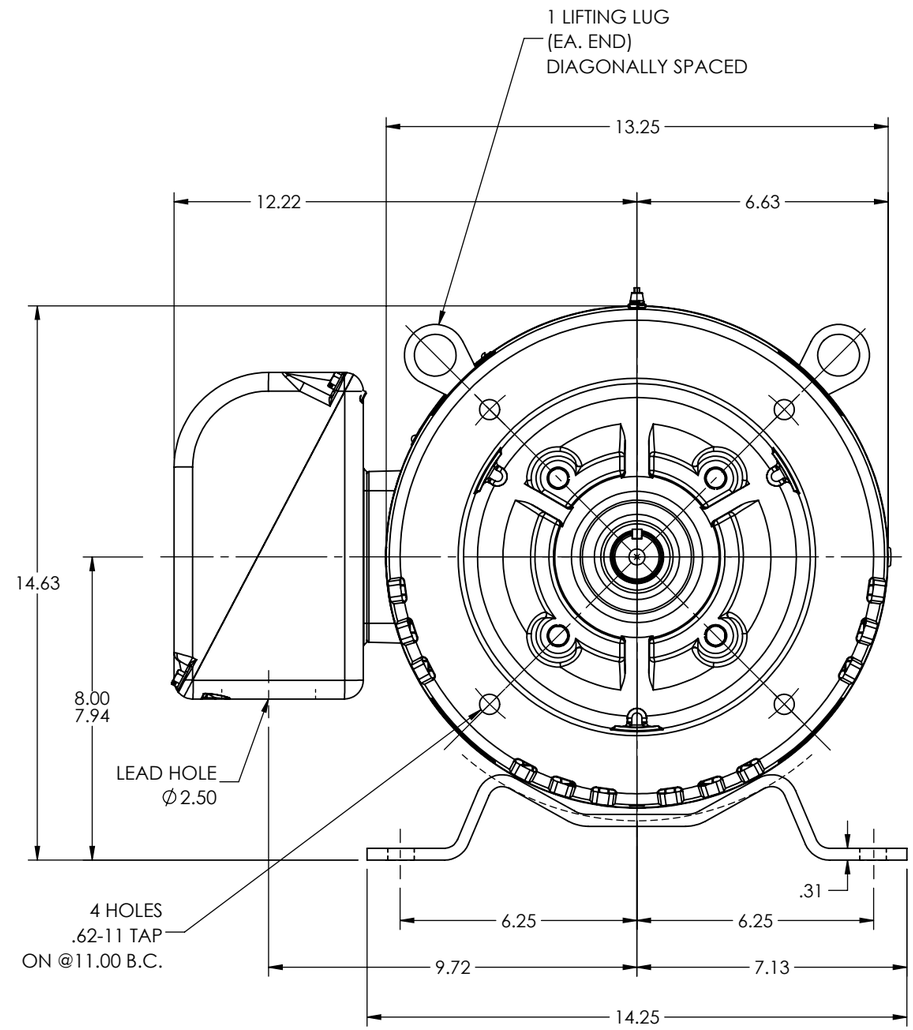

CUSTOMER IS RESPONSIBLE FOR DETERMINING THAT THE PRODUCT WILL PERFORM SUITABLY IN THE INTENDED APPLICATION

REV. DESC: UPDATE MATE ERRORS IN 3D MODEL			
REV: A	VERSION: 01	REVISED: 12:24:07 11/02/2022	TDR: 000001194199
MODEL NO. 40LY-000-066			REF: -
BY: USBUFRA			B

BALDOR - RELIANCE®

HORZ OPSB 324-6JP W/RODENT SCREENS

40LY-000-066