40LYE210

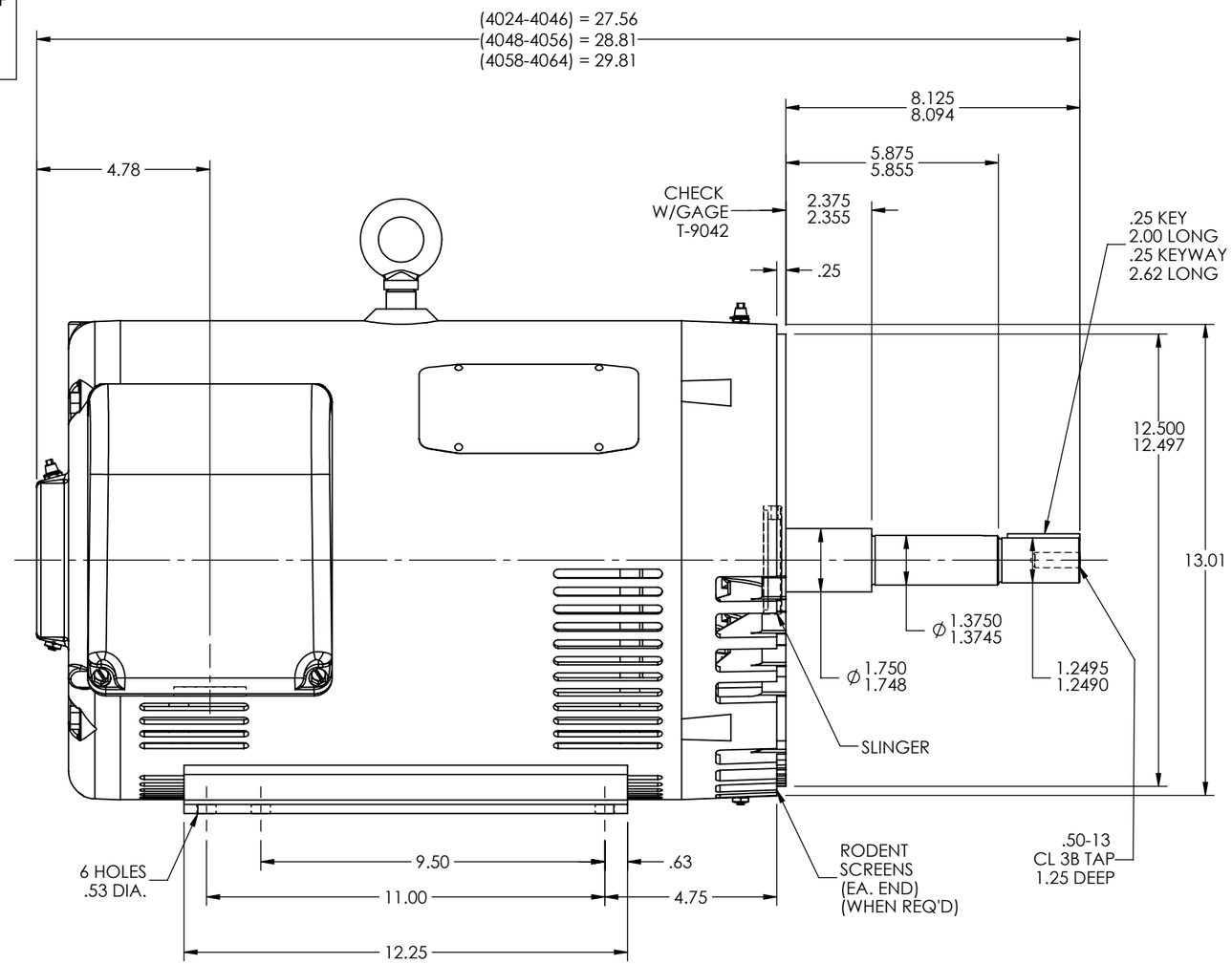


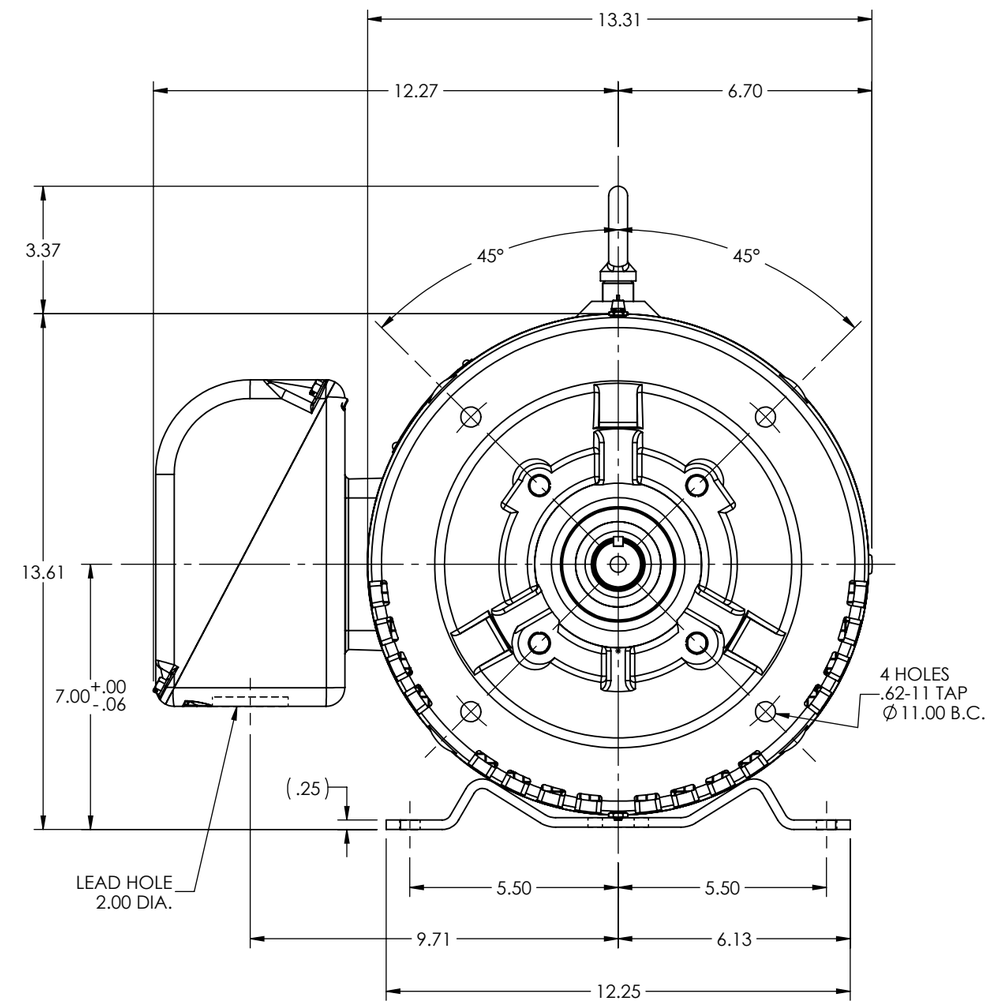


CUSTOMER IS RESPONSIBLE FOR DETERMINING THAT BALDOR'S PRODUCT WILL PERFORM SUITABLY IN THE INTENDED APPLICATION

| | | | |
|---|---|---|---|
| REV. DESC: CORRECTED SLINGER LEADER | | | |
| REV: H | VERSION: 08 | REVISED: 10:34:14 06/06/2025 | TDR: 000001257534 |
| MODEL NO. 40LYE210 | | | REF: - |
| BY: ENNIND0 | | | B |

BALDOR

HORZ OPSB 284-6JP W/SCREENS, SUPER-E

40LYE210