ABB BALDOR RELIANCE

Customer information packet

EJMM4115T

50HP, 1775RPM, 3PH, 60HZ, 326JM, 1272M, TEFC, F
Class - None
Division - Not Applicable

Copyright © All product information within this document is subject to ABB Motors and Mechanical Inc. copyright © protection, unless otherwise noted.
11/22/2026 11:42:18 PM

Specifications

Enclosure	TEFC
Frame	326JM
Frame Material	Iron
Frequency	60.00 Hz
Haz Area Class and Group	None
Haz Area Division	Not Applicable
Motor Letter Type	Three Phase
Output @ Frequency	50.000 HP @ 60 HZ
Phase	3
Synchronous Speed @ Frequency	1800 RPM @ 60 HZ
Voltage @ Frequency	230.0 V @ 60 HZ
	460.0 V @ 60 HZ
Agency Approvals	CSA
	CSA EEV
	NEMA PREMIUM
	UR
Ambient Temperature	40 °C
Auxiliary Box	NO AUXILLARY BOX
Auxiliary Box Lead Termination	None
Base Indicator	Rigid
Bearing Grease Type	Polyrex EM (-20F +300F)
Blower	None
Current @ Voltage	58.000 A @ 460.0 V
	126.000 A @ 208.0 V
	116.000 A @ 230.0 V
Design Code	A
Drip Cover	No Drip Cover
Duty Rating	CONT
Efficiency @ 100% Load	94.5 %
Electrically Isolated Bearing	Not Electrically Isolated
Feedback Device	NO FEEDBACK
Front Shaft Indicator	None

Part Detail

Revision	H
Type	AC
Mech. spec.	12J43
Base	
Status	PRD/A
Elec. spec.	12WGZ279
Layout	12LYJ043
Eff. date	11-21-2024
CD Diagram	CD0180
Poles	04
Leads	9#8
Proprietary	False
Created date	02-03-2021

Heater Indicator	No Heater
High Voltage Full Load Amps	58.0 a
Insulation Class	F
Inverter Code	Inverter Ready
KVA Code	H
Lifting Lugs	Standard Lifting Lugs
Locked Bearing Indicator	Locked Bearing
Motor Lead Quantity/Wire Size	9 @ 6 AWG
Motor Lead Termination	Flying Leads
Motor Standards	NEMA
Motor Type	1272M
Mounting Arrangement	F1
Number of Poles	4
Overall Length	30.65 IN
Power Factor	85
Product Family	General Purpose
Pulley End Bearing Type	Ball
Pulley Face Code	C-Face
Pulley Shaft Indicator	Tapped & Key
Rodent Screen	None
Service Factor	1.15
Shaft Diameter	1.750 IN
Shaft Ground Indicator	No Shaft Grounding
Shaft Rotation	Reversible
Shaft Slinger Indicator	Shaft Slinger
Speed	1775 rpm
Speed Code	Single Speed
Starting Method	Direct on line
Thermal Device - Bearing	None
Thermal Device - Winding	None
Vibration Sensor Indicator	No Vibration Sensor
Winding Thermal 1	None
Winding Thermal 2	None

Nameplate

NP3443LUA											
CAT.NO.	EJMM4115T			**CUST. P/N**						**ENCL**	TEFC
SPEC.	12J043Z279G2	**CC**	010A	**FRAME**	326JM		**SER.NO.**				
HP	50		**CLASS**	F	**HZ**	60					
R.P.M.	1775		**PH.**	3	**DES.**	A					
VOLTS	230/460			**CODE**	H		**ODE BRG**	6311	**DE BRG**	6312	
AMPS	116/58										
RATING	40C AMB-CONT			**NEMA NOM. EFF.**	94.5			**GREASE**	POLYREX EM		
P.F.	85	**SER.F.**	1.15	**CT6-60H(10:1)VT3-60H(20:1**							
USABLE AT	50HZ 50HP 190/380V 139/69.5A			SF1.0							
VOLTS	**AMPS**		**MAX. SPACE HEATER TEMP.**								

AC Induction Motor Performance Data
Record # 93227
Typical performance - not guaranteed values

Winding: 12WGZ279-R001	**Type:** 1272M	**Enclosure:** TEFC

Nameplate Data				**460 V, 60 Hz: High Voltage Connection**	
Rated Output (HP)			50	**Full Load Torque**	148 LB-FT
Volts			230/460	**Start Configuration**	direct on line
Full Load Amps			116/58	**Breakdown Torque**	437.3 LB-FT
R.P.M.			1775	**Pull-up Torque**	223.3 LB-FT
Hz	60	**Phase**	3	**Locked-rotor Torque**	255.3 LB-FT
NEMA Design Code	A	**KVA Code**	H	**Starting Current**	407.47 A
Service Factor (S.F.)			1.15	**No-load Current**	21 A
NEMA Nom. Eff.	94.5	**Power Factor**	85	**Line-line Res. @ 25ºC**	0.11287 Ω
Rating - Duty			40C AMB-CONT	**Temp. Rise @ Rated Load**	66°C
S.F. Amps			132/66	**Temp. Rise @ S.F. Load**	82°C
				Locked-rotor Power Factor	26.5

Load Characteristics 460 V, 60 Hz, 50 HP

% of Rated Load	**25**	**50**	**75**	**100**	**125**	**150**	**S.F.**
Power Factor	51	73	82	85	87	87	86
Efficiency	91.5	94.3	94.7	94.5	93.8	93	94.1
Speed	1791.2	1786.1	1779.1	1773.3	1766.2	1758.5	1769
Line amperes	25.1	34.1	45.4	58.2	72	87	66.5

ABB Motors and Mechanical Inc.

WINDING # 12WGZ279

Typical performance - not guaranteed values.

50 HP 3 PH 60 HZ 1775 RPM 460 V 1272M

TORQUES(LB-FT): PO=437.3 PU=223.3 LR=255.3 LRA=407.47

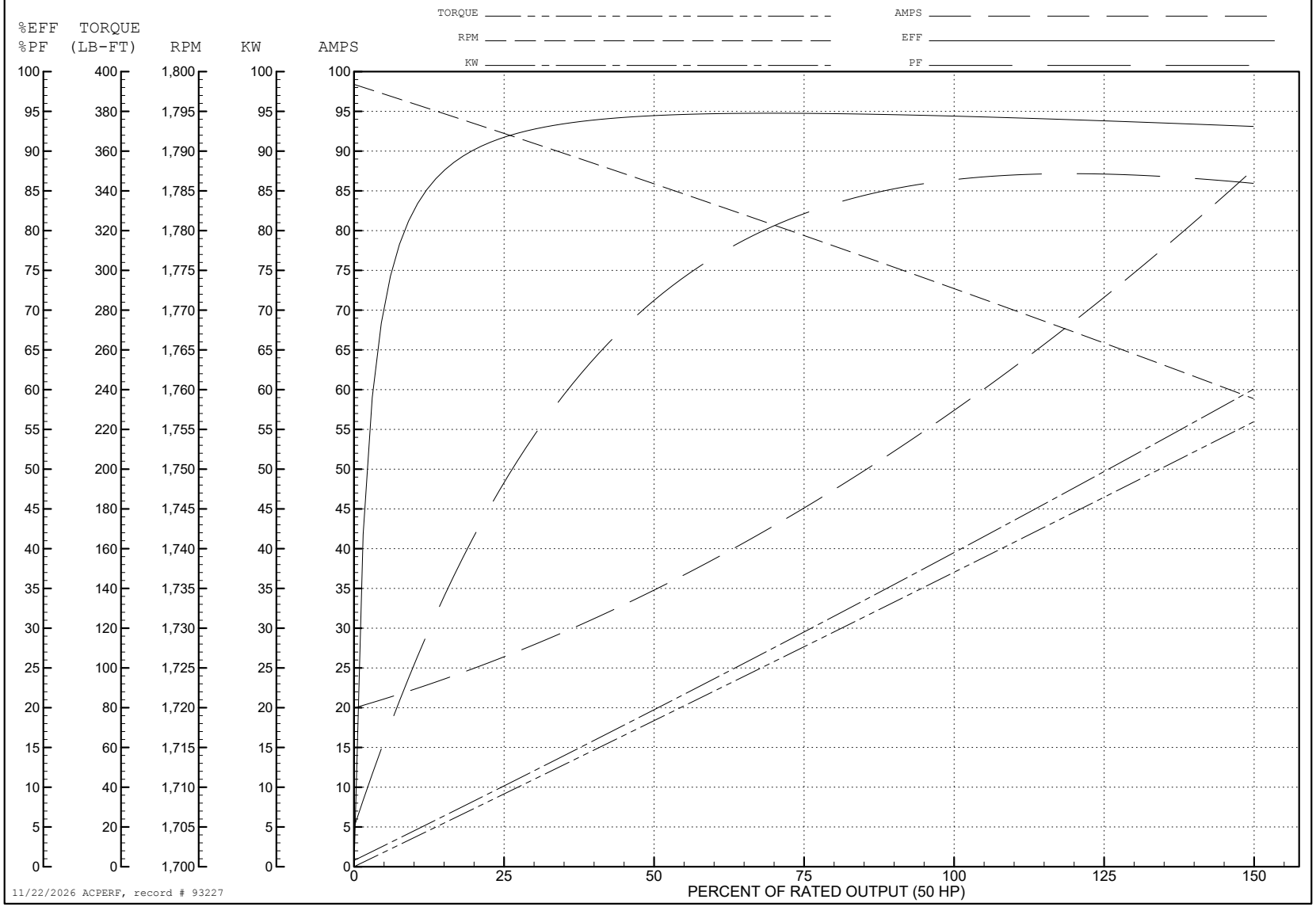

11/22/2026 ACPERF, record # 93227

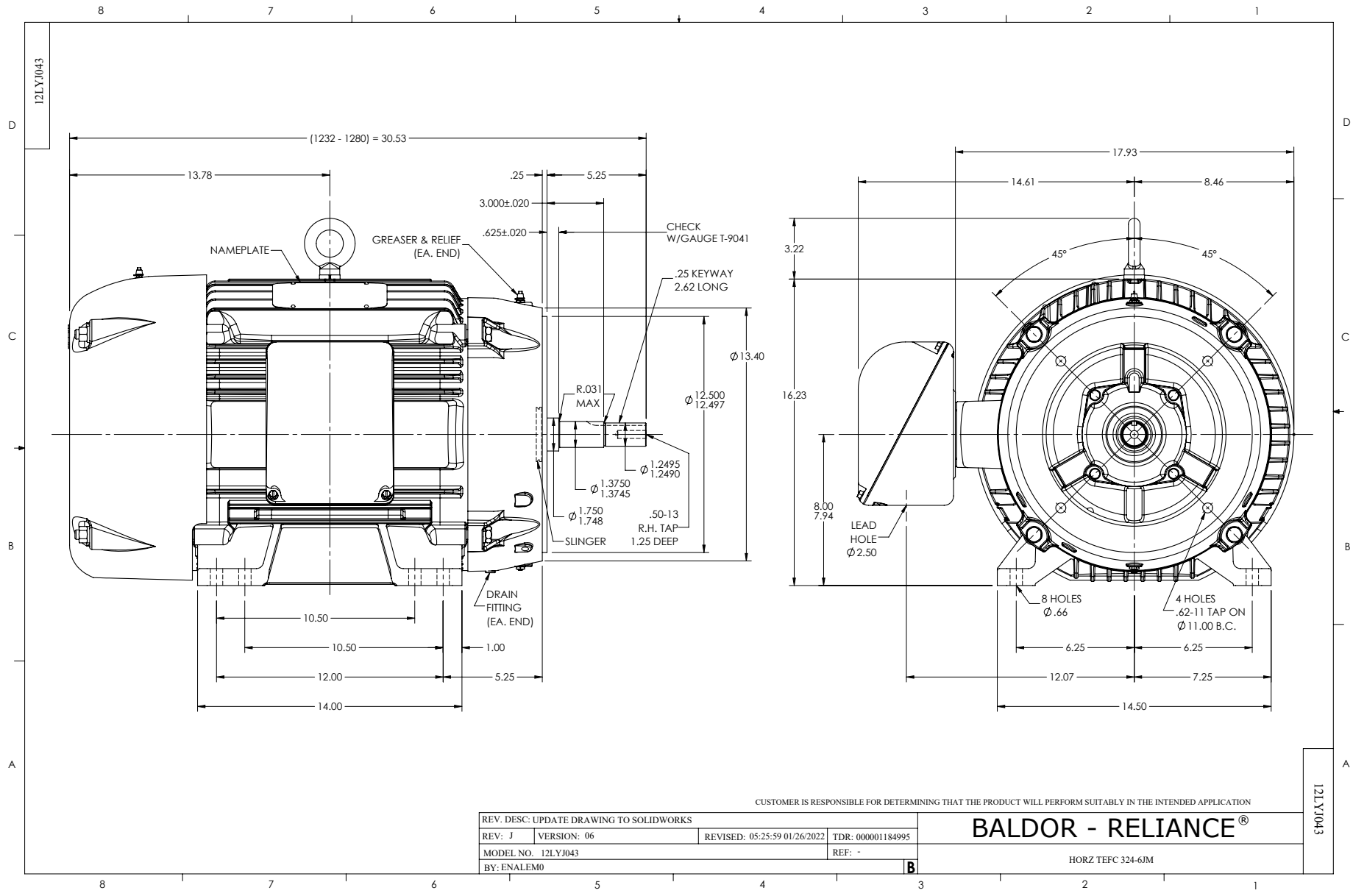
12LYJ043
(1232 - 1280) = 30.53
13.78
.25
5.25
3.000±.020
.625±.020
CHECK
W/GAUGE T-9041
NAMEPLATE
GREASER & RELIEF
(EA. END)
.25 KEYWAY
2.62 LONG
Ø13.40
R.031
MAX
Ø12.500
12.497
Ø1.2495
1.2490
Ø1.3750
1.3745
Ø1.750
1.748
.50-13
R.H. TAP
1.25 DEEP
SLINGER
DRAIN
FITTING
(EA. END)
10.50
10.50
1.00
12.00
5.25
14.00
17.93
14.61
8.46
3.22
45°
45°
16.23
8.00
7.94
LEAD
HOLE
Ø2.50
8 HOLES
Ø.66
4 HOLES
.62-11 TAP ON
Ø11.00 B.C.
6.25
6.25
12.07
7.25
14.50
CUSTOMER IS RESPONSIBLE FOR DETERMINING THAT THE PRODUCT WILL PERFORM SUITABLY IN THE INTENDED APPLICATION
REV. DESC: UPDATE DRAWING TO SOLIDWORKS
REV: J
VERSION: 06
REVISED: 05:25:59 01/26/2022
TDR: 000001184995
MODEL NO. 12LYJ043
REF: -
BY: ENALEM0
B
BALDOR - RELIANCE®
HORZ TEFC 324-6JM
12LYJ043

CD0180

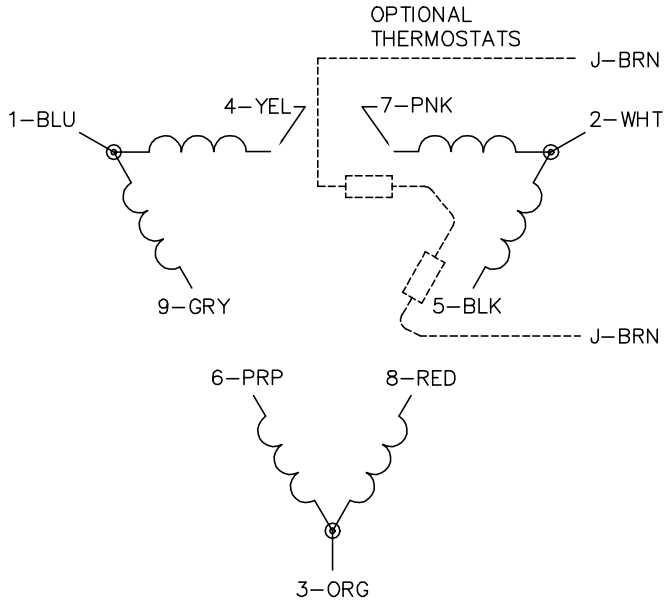

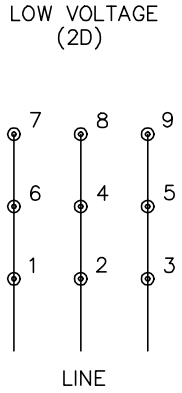

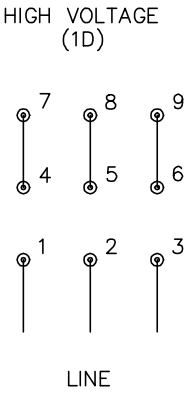

NOTES:

1. INTERCHANGE ANY TWO LINE LEADS TO REVERSE ROTATION.
2. OPTIONAL THERMOSTATS ARE PROVIDED WHEN SPECIFIED.
3. ACTUAL NUMBER OF INTERNAL PARALLEL CIRCUITS MAY BE A MULTIPLE OF THOSE SHOWN ABOVE.
4. LEAD COLORS ARE OPTIONAL. LEADS MUST ALWAYS BE NUMBERED AS SHOWN.

CD0180

REV. DESC: ADD CLASS CONN00000007		
REV. LTR: D	VERSION: 01	TDR: 000001099922
FILE: \AAA\00005\148	REVISED: 10:25:29 02/19/2019	BY: ENBRIR0
MTL: –		

BALDOR - RELIANCE®

3PH, DV, 9 LEADS, DELTA CONNECTION

SH 1 of 1