12LYJ043

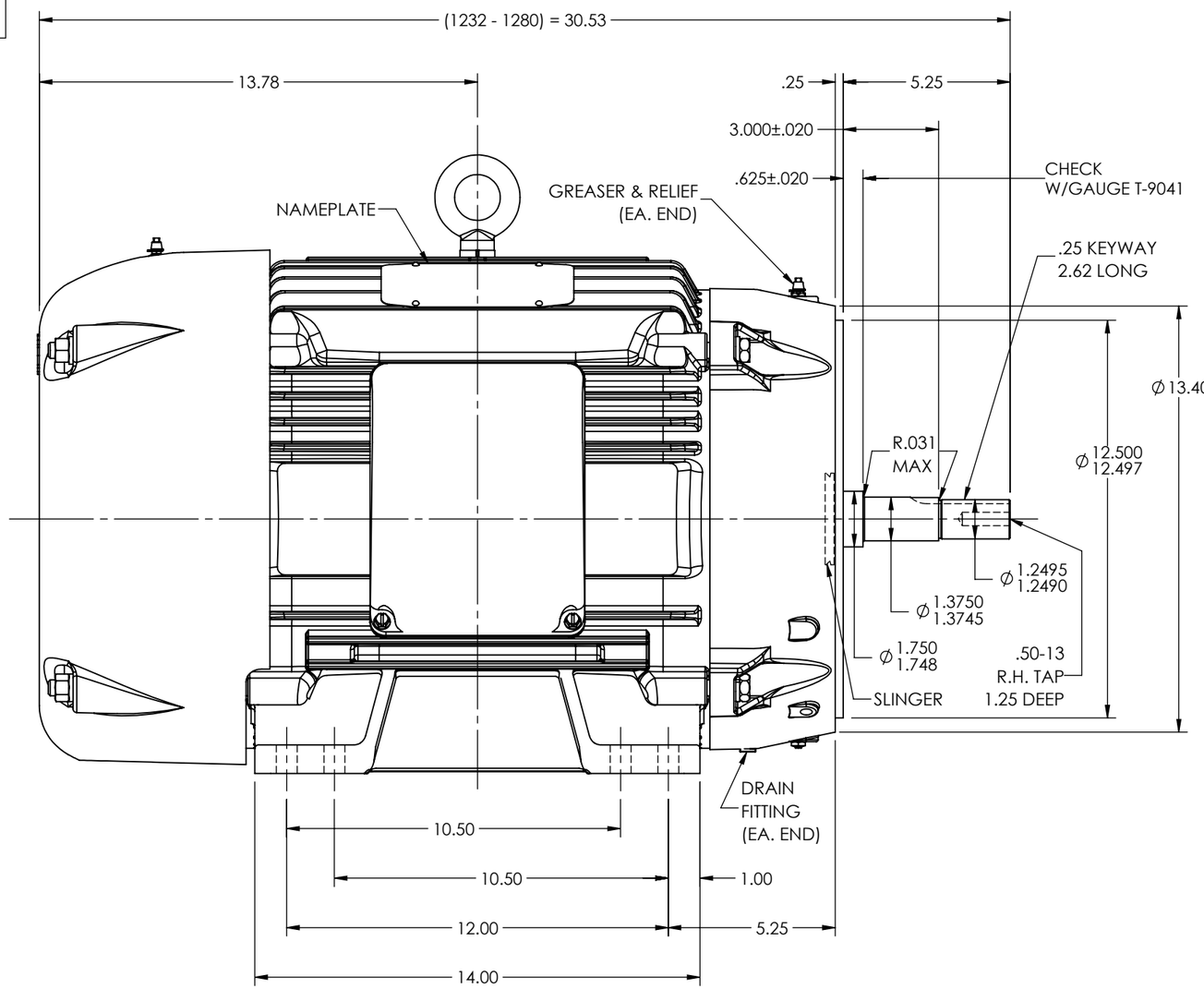

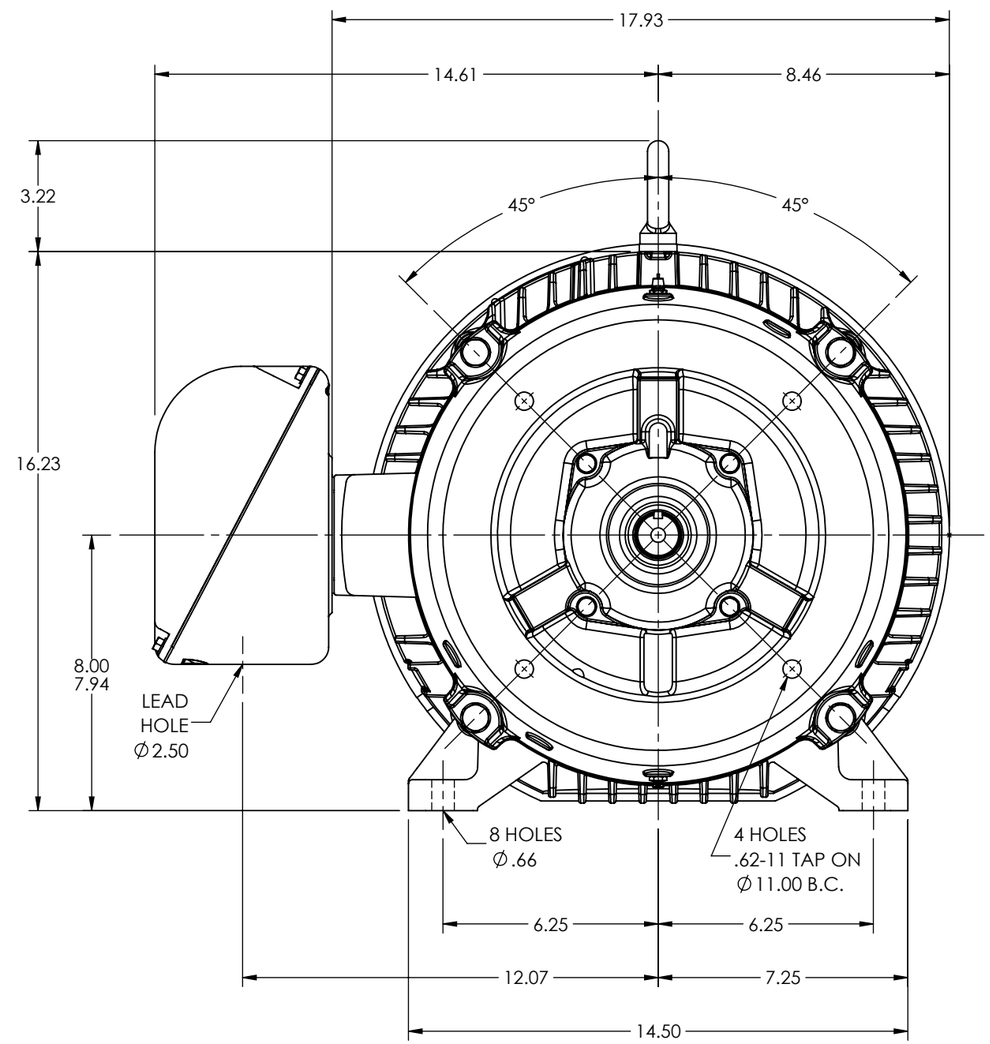

CUSTOMER IS RESPONSIBLE FOR DETERMINING THAT THE PRODUCT WILL PERFORM SUITABLY IN THE INTENDED APPLICATION

REV. DESC: UPDATE DRAWING TO SOLIDWORKS			
REV: J	VERSION: 06	REVISED: 05:25:59 01/26/2022	TDR: 000001184995
MODEL NO. 12LYJ043			REF: -
BY: ENALEM0			B

BALDOR - RELIANCE®

HORZ TEFC 324-6JM

12LYJ043