36LYG687

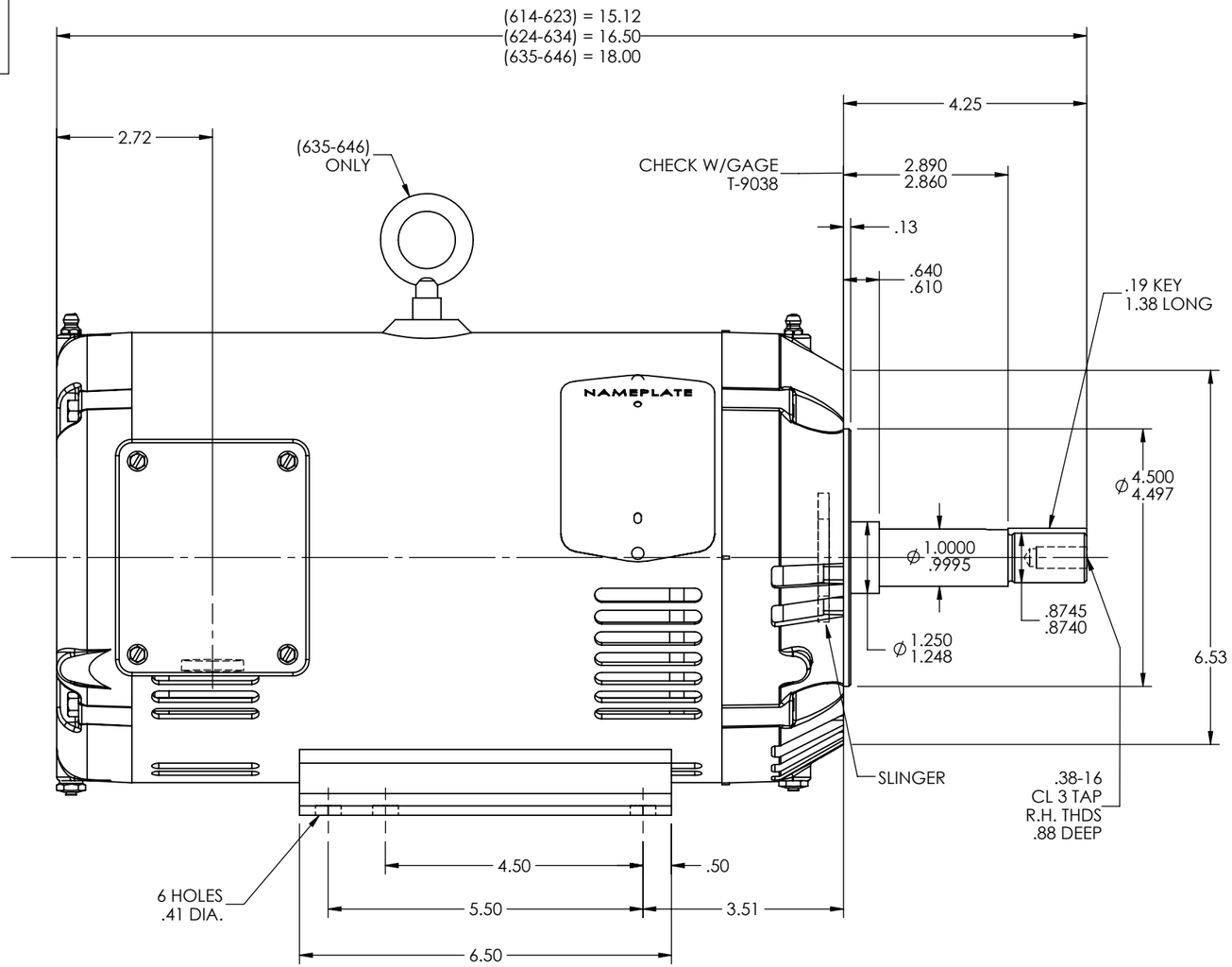

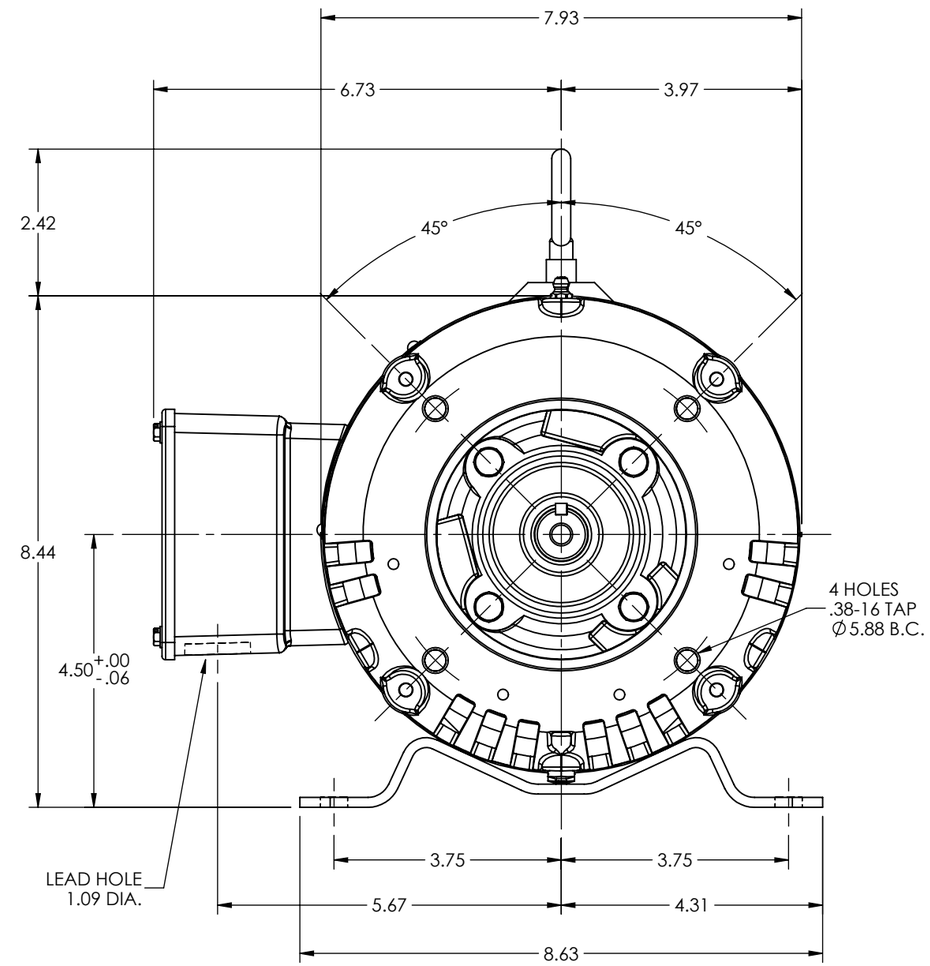

36LYG687

CUSTOMER IS RESPONSIBLE FOR DETERMINING THAT BALDOR'S PRODUCT WILL PERFORM SUITABLY IN THE INTENDED APPLICATION

REV. DESC: CONVERT DRW FROM AUTOCAD TO SWD			
REV: F	VERSION: 02	REVISED: 12:39:57 11/17/2023	TDR: 000001220227
MODEL NO. 36LYG687			REF: -
BY: USALMAZ			B

BALDOR

STD HORZ 182-4JM OPSB 36M W/SCREENS

36LYG687