36LYF971

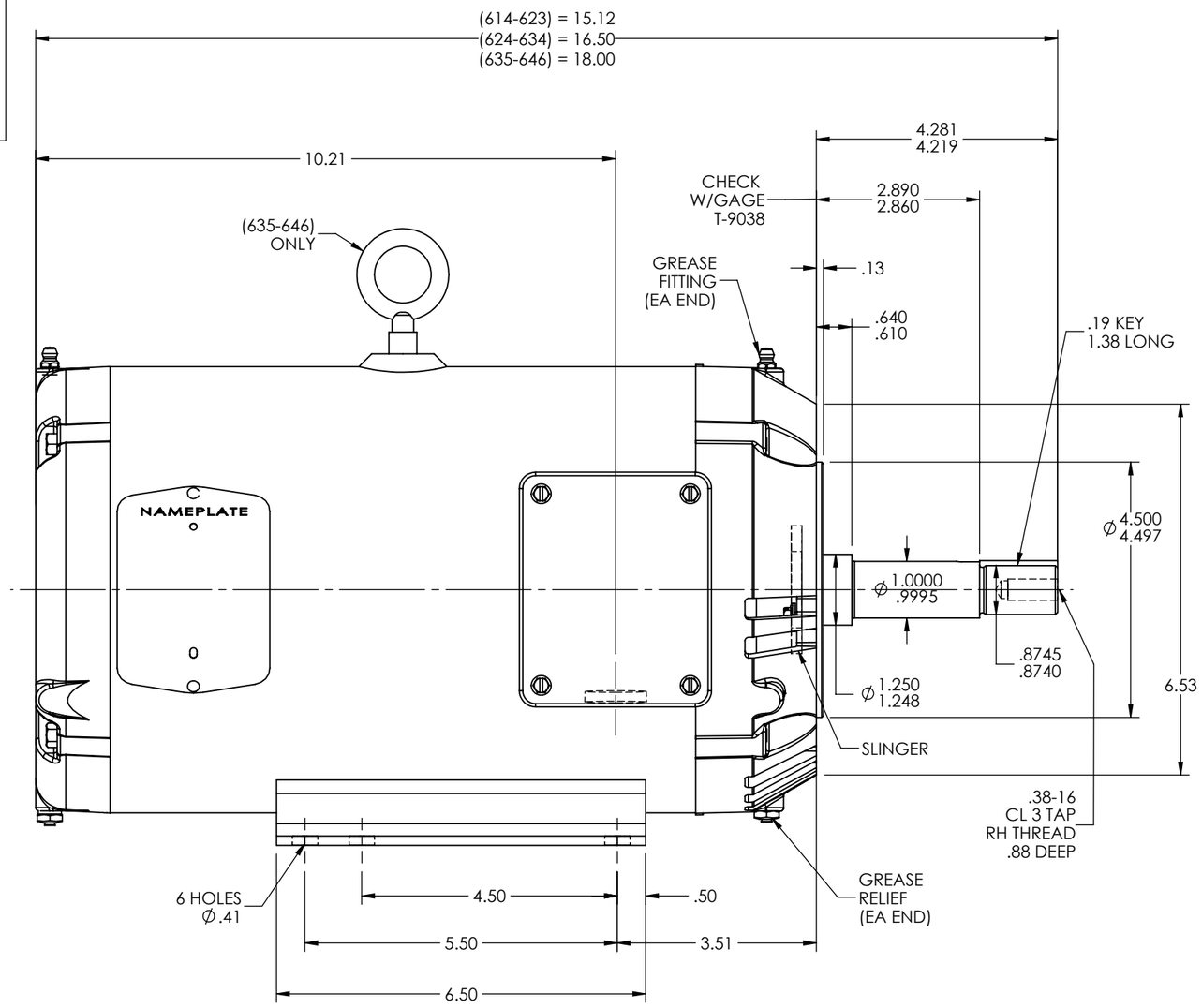

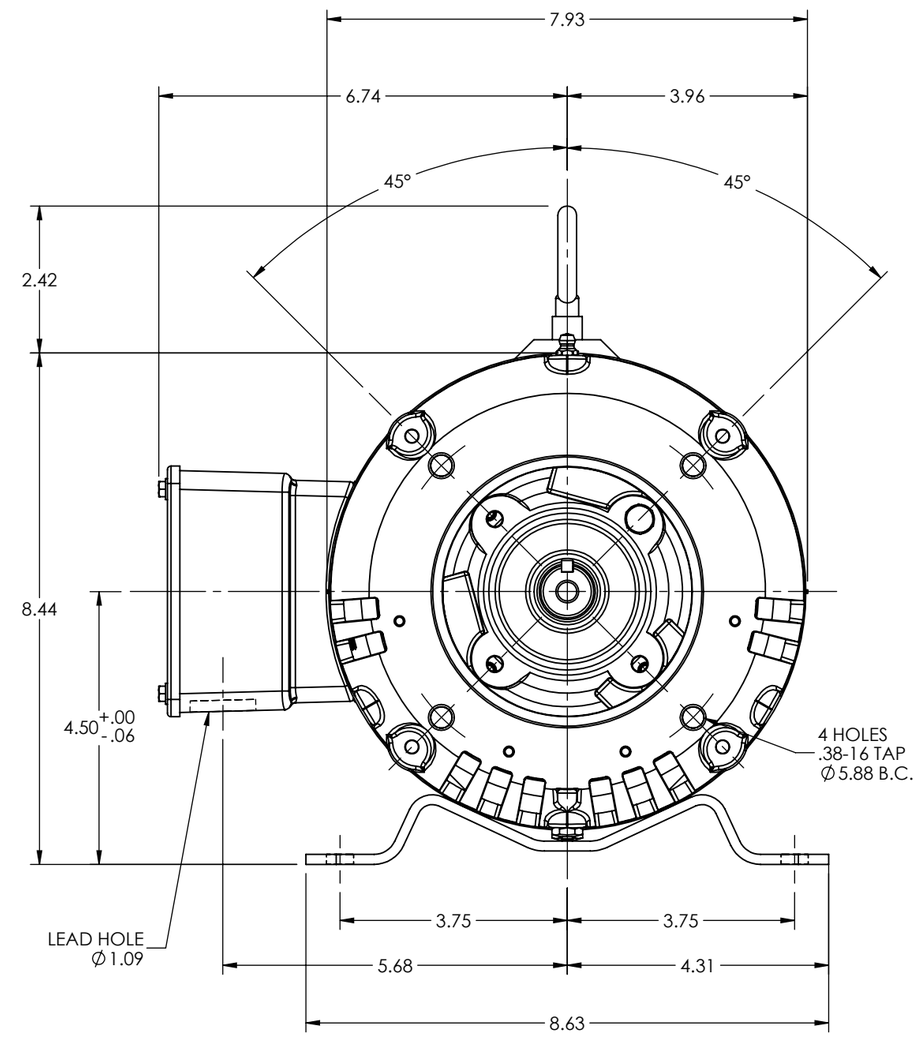

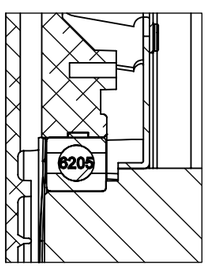

FRONT END DETAIL

CUSTOMER IS RESPONSIBLE FOR DETERMINING THAT BALDOR'S PRODUCT WILL PERFORM SUITABLY IN THE INTENDED APPLICATION

REV. DESC: CONVERT DRW FROM AUTOCAD TO SWD			
REV: L	VERSION: 03	REVISED: 12:20:00 11/17/2023	TDR: 000001220227
MODEL NO. 36LYF971			REF: -
BY: USALMAZ			B

BALDOR

STD HORZ 182-4JM OPEN 36M W/SCREENS

36LYF971